Improvement of B. Braun Catheter Connector – Final Report

April 30, 2024

Perifix® Catheter Connector (B. Braun, 2024)

Justin Bryant
Elise Fitsioris
Aras Ozdemir
Angelina Pribozie
Robert Reyther
Ethan Stout

Yes - Intellectual Property Rights Agreement
Yes- Non-Disclosure Agreement

Executive Summary

Healthcare professionals around the world depend on the Perifix® product line to support the safety and reliability of epidural procedures. B. Braun is a respected worldwide leader in regional anesthesia solutions that provides a range of epidural accessories, conveniently packaged as add-on options for existing Epidural or CSE trays. Recent testimony from medical professionals indicates that the current design of the Perifix® catheter connector developed by B. Braun Medical Inc. is unclamping during epidural medical procedures. A team of engineers at The Pennsylvania State University have been tasked with determining the cause of the connector unclamping, as well as with redesigning a higher fidelity version of the catheter connector that remains fixed during the entirety of its use. The goal is to develop a catheter connector that will still have the ease-of-use qualities of the previous design but will also have an improved longevity of the product.

This final report discusses the team's initial concept ideation, obtained by conducting literature and patent searches, market analyses, and translation of stakeholder needs to design specifications. It then discusses how a final prototype was obtained from the concept generation, selection, and detailed design process, as well as special considerations and a summary of conclusions. Patent searches and publications were used to create a foundation that would be used to compare the competing catheter connectors. This research was followed with an analysis of the market to understand how a redesign of the connector would impact the market. The team then gathered customer needs through interviews with stakeholders, and metrics were assigned to these needs through benchmarking to establish specifications. Through this, the team identified five major customer needs, including reopenable, durability, cost, and ease of use. After the needs were consolidated and identified, the team created a needs-weighing matrix to compare which needs were most important to the design. The needs were assigned metrics and specifications, which are presented in table format.

The critical subcomponents of the design were identified, including a locking mechanism that can be opened and closed, a component that ensure the lock stays in its desired state, and a grip force component that secures the catheter while allowing unobstructed fluid flow. The team completed the concept generation process, aiming to address all subfunctions, and then a concept scoring matrix was used to select designs to move forward, including a cap to secure the locking mechanism in place and an increase in deformation padding. Further discussion with the sponsor led the team to utilize a waveform design to increase surface area and improve the grip strength even further.

The team made CAD models of each of the design iterations and tested them to determine if the specifications and needs were met, or if the team would go back to the design process. Testing was conducted in a Penn State lab to determine if grip strength increased while still meeting the flow specifications, using an Instron and Cori-flow microfluidic device. Special considerations of the design were given to ethical, environmental, and regulatory concerns.

The final assembly of the prototype exceeded the sponsors' expectations, as B. Braun plans to use the design as proof of concept for a potential redesign. The durability need was met by increasing the grip strength by 47.8% while still maintaining an adequate flow rate, but more tests need to be conducted. The ease of use of the catheter connector was sacrificed in order to meet the durability and reopenable needs that were ranked higher in the needs weighting matrix.

Table of Contents

1.0 Introduction ____ 5

1.1 Initial Problem Statement ____ 5

1.2 Objectives ____ 6

1.3 Project Management ____ 6

1.4 Communication and Coordination with Sponsor ____ 7

2.0 External Search ____ 8

2.1 Literature Search ____ 8

2.2 Patent Search ____ 9

2.3 Stakeholder and Market Analysis ____ 10

2.3.1 Primary Market ____ 10

2.3.1.1 Existing Products ____ 11

2.3.1.2 Primary Market Analysis ____ 12

3.0 Needs Assessment ____ 13

3.1 Gathering Customer/Stakeholder Input ____ 13

3.2 Organization and Weighting of Needs ____ 13

4.0 Engineering Specifications ____ 14

4.1 Relating Specifications to Needs ____ 14

4.2 Establishing Target Specifications ____ 15

5.0 Concept Generation and Selection ____ 15

5.1 Problem Clarification and Critical Subproblems ____ 15

5.2 Concept Generation ____ 16

5.3 Concept Selection ____ 17

6.0 Detail Design ____ 18

6.1 Manufacturing Specifications and Process Plan ____ 18

6.2 Bill of Materials ____ 22

6.3 Analytical and Physical Modelling ____ 22

6.4 Risk Analysis ____ 23

6.5 Testing ____ 24

6.6 Budget ____ 26

7.0 Special Topics 27
7.1 Ethical Considerations 27
7.2 Environmental Statement 27
7.3 Regulatory Considerations 29
8.0 Final Discussion 29
8.1 Test Results and Discussion 29
8.2 Future Recommendations 32
8.3 Group Reflection 32
Acknowledgements 33
References 34
Appendices 35
Appendix A: Gantt Chart 35
Appendix B: Patent Search Classifications 36
Appendix C: Patent Search 37
Appendix D: Concept Generation 39
Appendix E: Technical Drawings 41
Appendix F: Billing of the Material 43
Appendix G: FMEA 44

1.0 Introduction

An epidural procedure is a form of anaesthetic used to produce loss of sensation below the waist. This is most used for pain relief in childbirth and other types of surgeries. To administer an epidural, the patient is given local anaesthetic to numb the skin, and then a needle is used to insert a catheter into the spine near the nerves that carry pain messages to your brain. A catheter is a soft flexible tube that is inserted into the body through a narrow opening to remove or add fluid and is shown below in **Figure 1**. Once the catheter is fully inserted, the needle is removed leaving just the catheter in the spine. Because the needle needs to be removed from the catheter, there can be nothing attached to the end of the catheter in the needles path. This in turn causes an issue when it comes to administering pain relief medications to the patient. That is why the Perifix® Catheter Connector was designed by B. Braun Medical Inc. to be connected to the end of the catheter, allowing fluid to be injected into the body as shown below in **Figure 1**.

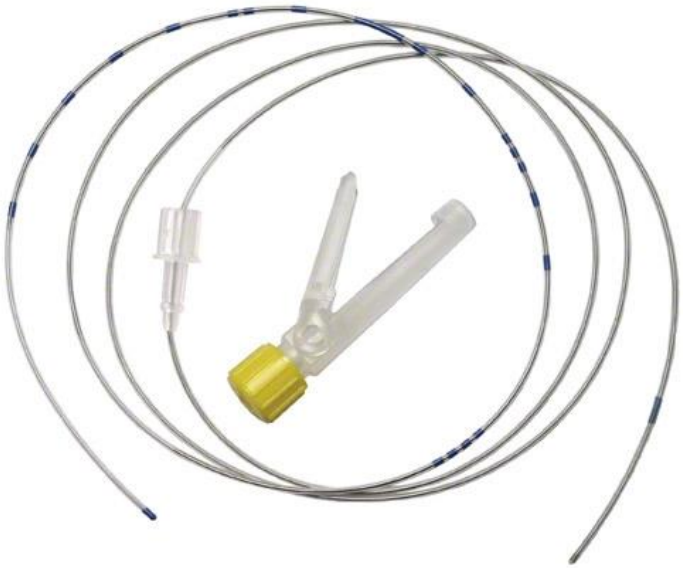

Figure 1. Epidural Catheter and Perifix® Catheter Connector (B. Braun, 2024)

The Perifix® Catheter Connector was designed by B. Braun Medical Inc. to seal catheter tubing, allowing fluid to be injected while simultaneously having the ability to be re-opened when necessary. One obstacle with developing this catheter connector is the device clamp opening prematurely while in use. Another obstacle is that the catheter can slide out of the connector despite the clamp being closed. This can lead to the device falling off and contamination occurring on the catheter. Therefore, the goal of this project is to develop a way to stop the device from opening prematurely and the catheter sliding out, all while having the ability to be re-opened in case of user error.

1.1 Initial Problem Statement

The initial problems with the current catheter connector include the clamp opening prematurely due to the insufficient clasping mechanism and the catheter sliding out of the connector due to

insufficient grip force. The goal of this project is to improve the current catheter connector design to enhance the durability and ease of use.

1.2 Objectives

A catheter connector will be redesigned for proper sealing of the catheter tubing, as well as allowing for the ability of the connector to be reopened for adjustment when necessary. There are several different catheter sizes used in an epidural procedure tailored to each patient's unique circumstances. Therefore, a catheter connector will be needed to fit each of the G19, G20, and G24 catheter sizes. To ensure a secure clamp between the catheter and the connector, the connector must be able to withstand tension and force created from syringes being twisted on, or from the movement of the patient. Additionally, the connector needs to have the ability to stay clamped onto the catheter for extended periods of time to prevent any desterilization of the inside of the catheter. To ensure that there is no leakage or occlusion when the catheter connector is clamped down, the connected system must be able to withstand 20 psi of pressure for 60 seconds and at least 1 psi of pressure should be able to freely flow through the catheter. Additionally, the connector must still allow for a minimum flow rate of 1.5 mL/min for G19, 0.5 mL/min for G20, and 0.15 mL/min for G24. Therefore, a balance between grip strength and flow must be achieved. The device must also be redesigned in a way so that the customer using the device is able to implement it with ease.

The redesign of the catheter must be at or under a unit price of $0.26. This means that the material and dimensions must be considered to stay under the maximum budget. Additionally, the variety of materials that are available for creating the device are limited. When considering redesigning the catheter connector, it is important to note that there are several limitations to the way the team of Penn State engineers can manufacture the redesigned piece. These limitations are due to the use of 3D printing as the main source for manufacturing the redesigned piece; meaning that the resolution and detail of the prints are limited. The redesigned catheter connector will accomplish the requirements stated, as well as keep in mind the constraints for the project design.

1.3 Project Management

There are several key deliverables for the redesign of the catheter connector including deliverables for the BME 450W class, as well as directly for the sponsor. Furthermore, there is a project proposal, three prototypes, and a project poster that are due throughout the entirety of the semester.

The team developed a Gantt chart to efficiently allocate their time toward the various tasks and milestones throughout the semester. The full Gantt chart can be found in **Figure A-1**. For brevity, a reduced version of the Gantt chart is shown in **Figure 2**.

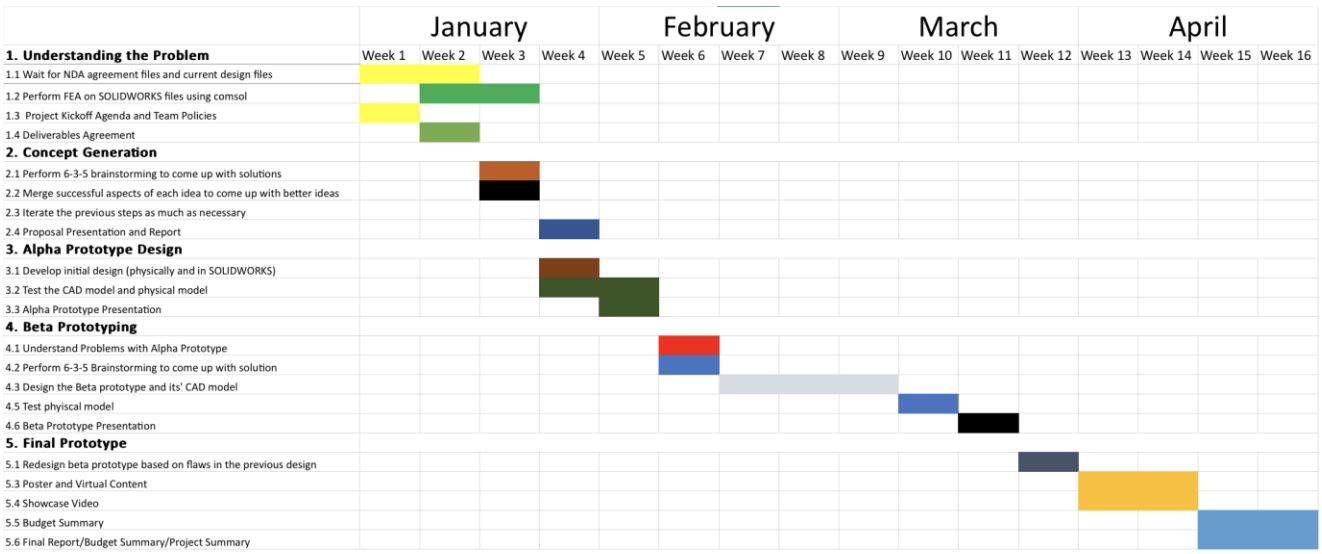

Figure 2. Abbreviated Gantt Chart

When assigning tasks, the expertise and background of each member of the team were considered. Since Justin, Angelina, Elise, and Robert are biomedical engineering students, they will focus on considering the medical aspects of the project and whether the design is biocompatible and safe for medical procedures. As mechanical engineering students, Ethan and Aras will use their knowledge of fluids, combined with their knowledge of material science and mechanics, to analyze the current and proposed design considering material properties.

Due to delays in receiving the catheter connector device, the team may tentatively push back the concept generation and finite element analysis tasks by two weeks, as the team just obtained access to both a physical component, as well as a virtual component.

Looking towards the future, the team plans to analyze the fidelity of the current part by modelling the flow—and hence the stress in the current part—using finite element analysis in COMSOL, while also analyzing the clamping mechanism in the physical part. From this point, the team will begin generating concepts to improve the current design of the product.

1.4 Communication and Coordination with Sponsor

Communication between Mr. Joel Bartholomew and the team will occur via ZOOM or Microsoft Teams. The busy schedule of Mr. Bartholomew required the team schedule in advance of the Teams meetings. Outlook was used to send deliverables and progress reports to the sponsor. B. Bruan's preliminary analytical models of the catheter connector were sent through Outlook. At this point in the capstone project, the team does not require a site visit to B. Braun's manufacturing sites near Bethlehem. As part of the NDA/IP, B. Braun Medical Inc. reviewed each prototype presentation to ensure that the presentations were without proprietary information. The display poster for the final prototype design was also altered so as not to publicly display experimentation values or model dimensions. Through communication, the team and B. Braun Medical Inc. worked together to decide on what features of the project were allowable for public view. The decision was made to nondimensionalize all experimental values and to make a theoretical waveform design.

Table 1. Sponsor Communication

Title	Date	Location	Time
Project Kick-Off	Thursday, 1/11/2024	ZOOM	9:00 A.M.
Weekly Meeting	Tuesday or Thursday	Microsoft Teams	11:15 A.M.
Proposal Review	Thursday, 2/01/2024	Microsoft Teams	12:05 P.M.
Alpha Presentation Review	Thursday, 2/15/2024	Microsoft Teams	9:00 A.M.
Beta Presentation Review	Thursday, 3/14/2024	Microsoft Teams	9:00 A.M.
Public Deliverables Review	Thursday, 3/28/2024	Microsoft Teams	9:00 A.M.
Prototypes Hand-Off	Tuesday, 4/25/2024	Microsoft Teams	9:00 A.M.

2.0 External Search

A thorough search was done to find any relevant patents on the market for epidural catheter connectors. For each catheter connector, there is list of advantages and disadvantages presented for the method. While this project is very specific to the needs to improve the functionality of B. Bruan's Perifix® Catheter Connector, there are other professionals in this field addressing the issues with clamp style catheter connectors. The team investigated foundational reviews of the connector along with clinician's recommendations into improving the aspects of the clamping mechanism of the catheter connector. These recommendations help the team get an idea of what has been done in research so far and if it has been successful.

2.1 Literature Search

In the research paper titled *Why the disconnect? Problems with a clamp style catheter connector* by Dr. Mountjoy *et al.*, four anaesthesiologists discuss problems that they have had with the B. Braun catheter connector. These physicians indicate that there are two primary problems with the current design of the catheter: the first being the clamp randomly unclamping and sliding out of the tubular part of the connector, and the second being the Luer lock on the connector not creating a secure connection with the catheter when tightened. There is currently no evidence to suggest that the connections are due to human error. The physicians further indicate that a previous design of the catheter connector utilized prior to 2018 did not have these issues. To address the issue, physicians started to use tape to secure the connector, and more recently have begun using a competitor connector, despite indicating that the competitor design is not optimal outside of the low disconnection rate (Mountjoy et al., 2019).

The catheter disconnecting not only provides an inconvenience for the doctor, but also puts the patient at risk of disease, as evidenced in the journal article, *Influence of protective measures after epidural catheter disconnection on catheter lumen colonization: an in vitro study* by Scholle *et al.* In the experiment conducted in this paper, a tip connected to a catheter was submerged in a bacterial solution, and once the fluid stopped rising, the researchers let the catheter sit for one minute, before removing the catheter and resting it on a sterile surface. The researchers then treated the catheter with three preventative interventions before connecting it to a catheter connector, including: cutting the end of the epidural catheter up to the bacterial suspension, spray wiping the end with three rounds of disinfectant, and then continuing administering anaesthetics. All possible consecutive combinations of these interventions were used to yield a wide variety of results. When compared to an untreated control group, the researchers found that using disinfectant reduced bacteria growth by 50%, while

cutting the catheter up to the point of bacterial growth was nearly perfectly effective at preventing bacterial growth. However, cutting the catheter mid-procedure is not always feasible, and hence this study demonstrates the importance of ensuring that the catheter does not disconnect for the sake of the patients' safety (Scholle et al., 2014).

There are several published articles that analyze the design of different catheter connectors. The article titled *Comparison of two epidural catheter connectors* by Doyle *et al.* analyzes some of the key differences between the B. Braun and the Portex catheter connectors. Specifically, the article analyzes the grip strength of the connectors and how prone the catheters are to disconnection. The article found that the grip strength of the two connectors is about equal, but that the B. Braun connector is less prone to disconnection (Doyle et al., 2011). Additionally, an article titled *The effects of needleless connectors on catheter-related bloodstream infections* by Btaiche *et al.* discusses whether needleless connectors, specifically mechanical valve connectors and split septum connectors, increase the risk for infection during epidural procedures. From this study, it was found that mechanical valve connectors significantly increase the risk of infection, and split septum connectors should be used if a needless connector is needed. This is the current solution until more research is conducted on mechanical valve connectors (Btaiche et al., 2011). A third article titled *Accidental epidural catheter removal rates and strength required for disconnection: a retrospective cohort and laboratory study* by Ishida *et al.* analyzes dislodgement rates among different types of catheters. One main takeaway from this article that is directly relevant to our project is that taping connector points of catheters is a very effective strategy for preventing disconnection (Ishida et al., 2022). Finally, a journal article titled *Design of a high-flow catheter connector to enhance fluid transfer"* by Cusumano *et al.* compares two different locking mechanism designs on catheter connectors: Lamprey locks and Luer connectors. The conclusion of this study is that the proposed Lamprey design in the article demonstrates higher flow rates than a traditionally used Luer connector (Cusumano et al., 2023).

2.2 Patent Search

A thorough patent search was completed through the USPTO using the CPC classifications outlined in **Table B-1** in **Appendix B**. The main classification search was done in A (Human Necessities), and within that classification the scope was narrowed down to focus separately on catheters and tube connectors. The team was looking for patented products that provide a similar function to the one they were tasked to design. A list of useful advantages and limitations of the design for each patent have been benchmarked in **Table 2**. More detailed information, as well as a schematic for each patent, can be found in **Appendix C**.

Patent 1 highlights the current iteration of the Perifix® catheter connector that the team was tasked with improving by their sponsor, B. Braun. The team intends to utilize aspects of the design that work well, while improving upon the design to address the customer needs.

Patents 2 and 3 highlight two of the competing epidural catheter connectors that are on the market. Both devices accomplish the same task of establishing a fluid seal on the catheter, while still allowing medications to be pushed through. Patent 2 utilizes a twisting and lock mechanism to seal the catheter, and Patent 3 uses a secure two latch system. It is useful for the team to know the types of designs that are currently patented.

Table 2. Patent Benchmarking

Patent Name	Patent No.	Advantages	Limitations
1: Catheter Coupling (**Figure C-1**)	US 10,471,247 B2	• Transparent window allows for a visual inspection to ensure that the end of the catheter has reached the stopping point • The snap-in locking component provides a pre-defined closing force no matter what pressure is applied • A protective webbing prevents undesired deformation of the tubing when the joint jaw is open • Increased ease of use compared to prior iterations	• The snap-in locking component could pop open with movement
2: Catheter Connection Hub (**Figure C-2**)	US 8,500,715 B2	• The hook and latch prevent the two rotating pieces from prematurely twisting • Audible click to know it is secure	• Requires two hands to twist open • Complicated design for manufacturing
3: Catheter Adapter (**Figure C-3**)	US 8,876,798 B2	• Has a two-latch system making it more secure than competitors • Formation of the flexible tubing is done by injection molding an elastomeric material	• Device is larger than competitors • A pointed object must be inserted into a notch to open the shells and remove the catheter

2.3 Stakeholder and Market Analysis

The primary stakeholder of this project is B. Braun Medical Inc., specifically the team's sponsor Joel Bartholomew. The team is improving upon the most recent iteration of the Perifix® Catheter Connector that is sold. B. Braun hopes to improve their current design to address some of the common user complaints. Common complaints are regarding issues with the clamp staying in place with movement. B. Braun's goal is to improve the catheter connector design so that their product is preferred over other competitors in the market.

2.3.1 Primary Market

The primary market for this project is hospitals who administer epidurals. While the market is large, it is also narrow, considering that B. Braun's Perifix® Catheter Connector is strictly used for epidural. To limit the scope, the market analysis will only focus on catheter connectors with that same intended use. The primary market analysis was done using both a top-down and bottom-up approach.

2.3.1.1 Existing Products

B. Braun produces the market's largest supply of epidural catheter connectors, however there are other competitors. They include the Epimed® Stingray Connector, Portex EpiFuse Epidural Catheter Connector, and the Teleflex Arrow® SnapLock Catheter/Syringe Adapter. Each product is described in more detail below.

The team's provided reference is B. Braun's Perifix® Catheter Connector, which is shown in **Figure 3**. When the jaws are open, the free end of a catheter can be inserted through the inner tubing. When the jaws are closed via the snap-in locking mechanism, the catheter will become secured in place, preventing backflow while allowing medication to be administered when needed. The security of the snap-in locking mechanism could be improved.

Figure 3. Perifix® Catheter Connector (B. Braun, 2024)

Another catheter connector on the market is the Epimed® Stingray Connector shown in **Figure 4**. In this design, the locking mechanism engages in coaxial rotation, and then is snapped into place. When the two twisting elements are not locked in place, a catheter can be inserted into the inner tubing. When the elements are twisted, a fluid seal is formed. A limitation to this device is that it may require two hands to operate.

Figure 4. Epimed® Stingray Connector (Epimed, 2024)

A third competing epidural catheter connector on the market is the Portex Epifuse Epidural Catheter Connecter manufactured by Smiths Medical Asd, Inc., which is shown in **Figure 5**. When the two clam shell components are open, a catheter can be inserted into the elastomeric inner tubing. When the two components are closed, a two-latch mechanism ensures that the shells do not come

apart. A limitation to this device is that a pointed object must be inserted into the notch to decouple the shells so that the catheter can be removed.

Figure 5. Portex EpiFuse Catheter Connector (Medline, 2024)

The fourth competing epidural catheter connector on the market is the Teleflex Arrow® SnapLock Catheter/Syringe Adapter, shown in **Figure 6**. This device uses friction to hold the catheter in place and connect it to a syringe for medicine administration purposes.

Figure 6. Teleflex Arrow® SnapLock Catheter/Syringe Adapter (Teleflex, 2024)

2.3.1.2 Primary Market Analysis

According to Business Research Insights, the global epidural catheter market is expected to reach $86 billion by 2031, which is a compound annual growth rate from 2022 (Business Research Insights, 2024). If the global epidural market is that large, the global epidural catheter connector market will follow suit. This is because some form of a connector is required to form an interface between the catheter and medication administration system. Often, a catheter connector will come in a set with the entire epidural tray, depending on how the hospital chooses to purchase their equipment. B. Braun Medical Inc. is the market share leader in epidurals, so this increases product exposure. If it is assumed that epidural catheter connectors make up just 1% of the total epidural catheter market, the total market value would be $860 million.

According to the John Hopkins Department of Anesthesiology and Critical Care Medicine, 60-70% of laboring women get an epidural (John Hopkins Medicine, 2024). The World Counts, which provides real time global data, estimates that there are about 140 million global deliveries each year (The World Counts, 2024). If it is assumed that 60% of those women delivering chose to get an epidural, that would be 84 million epidurals annually. That represents the number of opportunities for an epidural catheter connector to be used, indicating a very large market. If on average each epidural

catheter connector retails for $5, then the total market would be about $420 million. The average retail price was calculated by averaging prices per unit from the top brands on the market.

According to the comparison of the bottom-up and top-down analysis, the catheter connector market is even smaller than 1% of the total epidural catheter market. According to the analysis, it is only 0.5% of the total market share.

3.0 Needs Assessment

Research was completed to identify areas for improvement within the current and previous designs of the catheter connector. The needs assessment was developed from product criticisms given by clinicians who offered their suggestions about improving the catheter connector clasping mechanism. There were specified requirements that the sponsors and stakeholders wanted with an improved product. This section provides an overview of how the team consolidated the needs and properly weighted crucial design characteristics of the catheter connector to refine project design process.

3.1 Gathering Customer/Stakeholder Input

In this section, the team details the methods and approaches used to gather input from the customer. This process is critical to ensure that the project aligns with the needs and expectations of the client.

The primary process of gathering customer input was through weekly teams' meetings with the sponsor. Through these interviews the team gained insight on the product development process and received critical information such as requirements, needs, and constraints. This not only helped to gather quantitative specifications, but also allowed the team to understand the qualitative aspects of the sponsor's expectations. By combining both quantitative and qualitative feedback, the team was able to create a comprehensive understanding of the sponsor's needs, ensuring a more targeted and effective development process.

3.2 Organization and Weighting of Needs

Table 3 presents a Needs Weighting Matrix for the B. Braun Catheter Connector; a tool used to evaluate and prioritize various needs associated with the product. The matrix includes five key needs: Reopenable, Durability, Ease of Manufacturing, Cost, and Ease of Use. Each need is compared against the others through a pairwise comparison method, resulting in a score that reflects its relative importance. A higher score indicates greater importance.

Table 3. Needs Weighting Matrix of B. Braun Catheter Connector

Needs	Reopenable	Durability	Ease of Manufacturing	Cost	Ease of Use	Total	Weight
Reopenable	1	1	1.25	1.43	2	6.68	0.23
Durability	1	1	2	2.5	3	9.5	0.33
Ease of Manufacturing	0.8	0.5	1	1.2	1.5	5	0.17
Cost	0.7	0.4	0.83	1	0.9	3.83	0.13
Ease of Use	0.5	0.33	0.67	1.11	1	3.61	0.13

The range of needs mentioned above reflects the five most important categories that the team has decided on. The distribution of weight was determined based on the specific needs of the sponsor. In this case, the sponsor desired the catheter connector to be reopenable multiple times by clinicians. This crucial information led the team to assign it one-third of the total weight. Another category that received a significant weight allocation is the durability of the device. The device not only needs to withstand a minimum force of 1 lb but also has to last for at least three consecutive days. Meeting these criteria will result in an enhancement in the product's quality, safety, and overall reputation.

The remaining categories of Ease of Manufacturing, Cost, and Ease of Use were uniquely determined by the team, as they are essential quality traits of a product. Given that over 20 million units are manufactured annually, it is crucial for the product to be easily manufacturable and cost-effective.

4.0 Engineering Specifications

4.1 Relating Specifications to Needs

After identifying the customer needs and analyzing the importance of each, the needs identified were correlated with specific metrics that can be tested experimentally. **Table 4** below shows how each need will be tested based on corresponding specific metrics. This will provide the team with a quantifiable way of identifying the implemented requirements and improvements made on a new design compared to the original Perifix® Catheter Connector. It is important to note that manufacturing was discarded in the needs metrics table, as finding a metric for manufacturing was undetermined.

Table 4. Customer Needs and Corresponding Metrics

	Need	Metric	1	2	3	4	5	6	7	8	9	10	11	12
			Keep the cost per unit at or under the current price [$]	Apply catheter connector with one hand	Maximum time allocated to apply catheter clip [s]	The clip is able to be reopened	The clip is able to clamp down onto the catheter [lb]	Applying a minimum pull force via tension to the clip [lb]	Allowing for a dynamic flow rate depending on Gague length [mL/min]	Clip needs to be able to fit G19, G20, and G24 catheter sizes	Audible clicking sound	Clip needs to stay attached to the catheter for extended period of time [days]	Catheter needs to be able to withstand pressure [psi]	Catheter needs to be able to allow pressure to freely flow [psi]
1	Cost		X											
2	Ease of use			X	X	X				X	X			
3	Reopenable					X								
4	Durability					X	X	X	X	X		X	X	X

4.2 Establishing Target Specifications

When designing a new catheter connector design, the specific needs were listed in the needs-metric matrix. The corresponding target specifications are listed below in **Table 5.** These target specifications will be used to outline the team's design phase and to effectively evaluate the prototypes generated.

Table 5. Preliminary Target Specifications based on the Customer Needs

Customer Need	Metric	Target Specification
Affordability	Cost	≤ $0.26
Ease of Use	Time of Application	≤ 120 seconds
Grip Strength	Force Applied	$1 < x \leq 5$
Free Flow	Pressure	≥ 1 psi.
Leakage	Pressure	= 20 psi for 60 seconds
Minimum Flow	Flow Rate	≥ 1.5 mL/min (G19), ≥0.5 mL/min (G20), ≥0.15 mL/min (G24)
Size	Guage Size	= G19, G20, and G24
Durability	Days Used	≥ 3 days

One of the most important customer needs is the grip strength of the catheter connector. This is specified by the amount of pull force applied by a tensile tester on the catheter and connector. Most other models of a connector allow for up to 5 pounds of force, while the B. Braun Medical Inc. design can only sustain 1 pound of force. With the redesign, the team plans to increase this number to the same as B. Bruan's competitors. This could in turn also improve the issue of the connector falling off while the clamp is closed. Another important aspect that relates to the grip strength is the minimum flow rate. While increasing the grip strength, the team must ensure that the minimum flow rate for each catheter size is still met. This will be tested by having a flow meter attached to the connected system after ensuring that over 1 pound of grip strength has been met.

B. Bruan medical also expressed the want of the catheter clip to be able to be implemented with ease of use. The team plans on assessing this metric by testing if the clip can be clamped down onto the catheter with one hand while also being applied in 120 seconds or less.

Another aspect of this redesign is ensuring that the connected system does not have any leakage or occlusion. This means that when the catheter clamp and catheter are in a closed system, no pressure should be leaking out. This is tested by having 20 psi of pressure in the system for 60 seconds. For occlusion, fluid should be able to freely flow through the catheter, which is tested by having at least 1 psi of pressure flow through the connected system.

Lastly, B Bruan's current catheter connector costs $0.26 per unit to manufacture. Therefore, the team is tasked with keeping the redesigned catheter clip at or under the same price. This will be measured by calculating the price of the materials used per unit.

5.0 Concept Generation and Selection

5.1 Problem Clarification and Critical Subproblems

In the redesign of the B. Braun Catheter Connector, the team is addressing the functional necessities identified in the "Black Box" diagram. **Figure 7** showcases a functional decomposition with various inputs and outputs achieved through state changes shown inside the black box. Inputs

such as closing force, opening force, torsion, and pressure/shear fluid reaction force are analyzed to generate precise outputs required for optimal device performance. The conversion of kinetic to potential energy and potential to kinetic energy, as forces are applied, is essential in achieving a state change in the locking mechanism—from open to closed and vice versa. This will ensure that the needs such as reopen ability are met without any problems, and that it stays locked when the mechanism is in the locked state. The locking mechanism's ability to resist tension and compression ensures it stays in the desired state once activated, preventing accidental disengagement. Moreover, managing kinetic energy dissipation within the boundary layer is crucial for the flow control mechanism, ensuring that the catheter maintains an unobstructed flow at the set flow rate. This systemic approach ensures that all dynamic forces are accounted for in the connector's function, aiming to enhance safety, reliability, and usability in clinical settings.

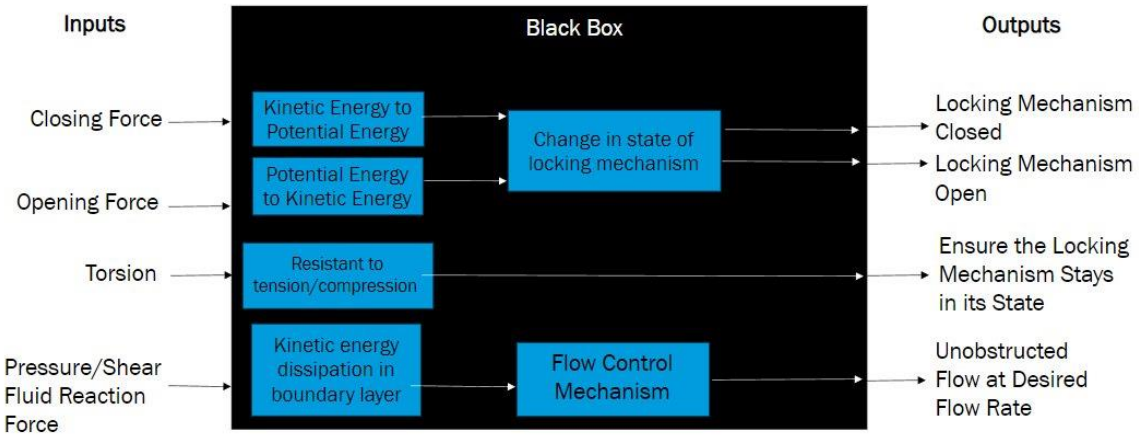

Figure 7. Functional Decomposition

5.2 Concept Generation

The concept generation was developed around the weighted needs of reopen ability, durability, cost, and ease of use. The ease of manufacturing need was ignored during design stages as although the team had free reign to develop a prototype design, the concept generation was constrained to stay similar to the current product on the market as to not to cause a complete change in the manufacturing process for the new prototype. The main idea of the concept generation was how the team can optimize the current needs of the client while simultaneously developing a prototype that can be manufactured by B. Braun Medical Inc's current manufacturing process. The team's main method of concept generation was to generate concept sketches. The sketches were reviewed among the team and with the sponsor during weekly meetings. Sponsor feedback further influenced the concept generation, and by extension the concept generation process. **Table 6** showcases the needs and its accompanying generated ideas. Here, it can be clearly seen that reopen ability and durability are the forefront of the project since they were given the highest weight in the need's matrix. **Appendix D** shows some of the sketches created and discussed between the team and the sponsor during the weekly meetings. More importantly, **Figures D-1** and **D-2** show how the most important needs, reopen ability and durability, were met through concept sketches.

Table 6: Needs and Corresponding Generated Ideas

Needs	Generated Ideas
Reopen ability	• Sleeve • Clip • Cap • Elastic Band • Barbell clamp
Durability	• Wave form design • Retractable Hinge • Double Snapping mechanism
Ease of Manufacturing	• 3D Printable pieces • Basic Geometry
Ease of Use	N/A

5.3 Concept Selection

To determine which catheter connecter redesign concept best meets the customer needs, the team first screened concepts by going through each group members' concepts generated through the concept generation stage and voting on whether to continue with each concept or not. The group unanimously decided to continue considering the following five concepts: a sliding lid, a catheter cap, a hex nut, an addition of a viscous lubricant, and double clasp jaw (all the sketches for these ideas are shown in the concept generation section).

After deciding on these five concepts, the team decided to create a concept scoring matrix ranking these concepts based on the needs of the customer. In **Table 7**, the customer needs are on the left column, and each of the customer needs are shown in the top row of the matrix. The weights of the needs are also shown in the matrix based on how important the needs are relative to one another (the weights were established in **Table 3** in the needs weighting section). The team then ranked each concept based on how well they were expected to meet each customer need on a scale of 1-5, with 1 being the worst score and 5 being the best score. For each concept, the team then multiplied the weight of each need by the score given to the design requirement for that need, and then summed the values up to get a weighted score for that concept.

Looking at the outcomes from the concept scoring matrix, the catheter cap and the hex nut design had the highest scores, with the catheter cap having a score of 4.1 and the hex nut having a score of 3.65. These two ideas were followed by the sliding lid with a score of 3.27, the double clasp jaw with a score of 2.705, and the lubricant addition with a score 2.7. These catheter cap and hex nut not only had the highest score but also met the teams' expectations, as after discussing the results the team unanimously agreed that these were overall the best ideas out of all the ideas we generated. Hence, the team decided to move forward with these designs.

The main pro of the catheter cap is that it will ensure that the catheter lid remains closed even when the clasping mechanism on the top jaw fails, drastically improving the reopenable and durability aspect of the customer needs. One of the main cons of the catheter lid is that it will increase the cost. Because the lid is another component that will need to be manufactured, there will be increased costs. Furthermore, the cap requires two hands to use, which decreases the ease of use of the product. However, our team believes that the overall benefits related to the product being reopenable/durable from the addition of a cap trump the cost and ease of use aspects of the addition of a cap.

The main pros of the hex nut design include the fact that the improvements would not be difficult to manufacture and that the new clamp would tentatively increase the durability aspect of the

design. However, the new design tentatively could disrupt the flow field due to a tighter grip, which would potentially cause issues with reaching the necessary flow rate.

Table 7. – Concept Scoring

	Weight	Sliding Lid	Catheter Cap	Hex Nut	Lubricant Addition	Double Clasp Jaw
Reopenable	0.23	3	4	3.5	3	2
Durability	0.33	3	4.5	4	4	2.5
Ease of Manufacturing	0.17	4	5	4	1	3
Cost	0.13	4	3	3	2	4
Ease of Use	0.13	3	3.5	3.5	2	3
Weighted Total		3.27	4.1	3.65	2.7	2.705

A score of 5 is the best score, while a score of 1 is the worst score.

At the end of our Beta prototype testing with the Instron machine, we found that the hex nut prototype decreased the grip strength instead of increasing it as anticipated. After consulting with the sponsor, the idea of a waveform top jaw design was created. We chose to prototype this design since we thought that adding more points of contact between the top jaw and the tube would improve grip strength. The main pro of this design is the improved grip strength, while the main con is the disruption to the flow field given the choke points that form due to local elastic deformation of the tube.

6.0 Detail Design

6.1 Manufacturing Specifications and Process Plan

The catheter connector provides a grip force upon the insertion of a catheter and prevents the catheter from sliding out or leaking fluid. **Figure 8** describes the components of the two variations of the final prototype since the only differing feature among the version 6 and version 7 models is the height of the major axis in each model. A catheter is inserted into the bottom jaw (1) through the inner elastic tubing (3). Once the catheter is inserted, the top jaw (2) is then clamped down to hold the catheter in place. An elastic cap (4 or 5) is then pressed around the top and bottom jaw to offer additional gripping force to prevent the catheter connector from spontaneously opening during use. The elastic caps are mounted on the bottom jaw (1) during transport to decrease the number of bags used during manufacturing. Either of the two style caps can be used to fulfill the need for reinforcing the clasping mechanism. The differing factor between the two cap designs is the aesthetic appeal which can be later decided by B. Braun Medical Inc. **Figure 9** shows both cap styles and the direction in which the caps cover the top and bottom jaws. The red arrow in 9A and 9C shows the sliding path direction in which each cap will take when the catheter connector is being used during operation. In 9B and 9D, the cap location is shown to fully cover the top and bottom jaw. There are two different versions of Bottom Jaw which are version 6 and version 7. The version 6 (**Figure 10**) bottom jaw has an ellipse with a major axis of 0.5mm, while the version 7 (**Figure 11**) bottom jaw has an ellipse with a major axis of 1.0mm. **Figure 12** displays the top jaw waveform pattern which has ellipses having a major axis height of 1.2mm. The top jaw waveform pattern interacts with the bottom jaw to allow fluid to pass through while also increasing the surface area for the clasping mechanism. The top jaw is used in the same design between the version 6 assembly and the version 7 assembly. **Figure 13** features the ledge in which the caps will interlock as to anchor when reinforcing the top and bottom jaw. This

ledge follows the half of ellipse of the bottom jaw. Detailed drawing of the different components, as well as the cap, can be found in **Appendix E**.

The team decided to use 3D printing to manufacture the prototype due to its small and detailed design. As opposed to other manufacturing methods available to the team, 3D printing allows for the CAD models to be consistently reproduced. The team chose to use the Formlabs Form 3 resin printer due its availability in the Chemical and Biomedical Engineering Building and its high-resolution printing capabilities. The materials used to construct the catheter connector include clear resin, durable resin, and elastic 50A resin as listed in **Table 8**. The top jaw is molded from clear resin while the bottom jaw is molded from durable resin. As for the inner elastic tubing and the two cap variations, 50-A elastic resin was used to produce these parts. The prototype's design was kept within the manufacturer's ability to alter their injection models and not have to redesign a new method to manufacture their catheter connectors.

The manufacturing process plan for the two prototype variations consisted of uploading the SolidWorks STL part files into the Preform application to be printed by the Form 3 printer. The printer cannot print entire assemblies, so each part must be printed individually. Once the SolidWorks STL files are imported into the Preform Dashboard, the part file can be duplicated and angled so that the printer can make the appropriate supports to print the imported part. After formatting in the Preform dashboard, the preform file is then sent to the printer to initiate printing. The desired resin cartridge and resin tank are inserted into the printer. The platform for the part to be printed on is also inserted into the mount arm of the printer. After the printing of the uploaded part, the part must be extracted from supports and the platform. Each printed part must undergo an isopropyl alcohol bath to remove residual resin. The final stage of the manufacturing process is the curing stage which varies depending on the type of resin chosen for printing. Once all four components are printed, the top jaw snaps into the bottom jaw and the inner elastic tubing is adhered to bottom jaw with clear Nail Extension Gel.

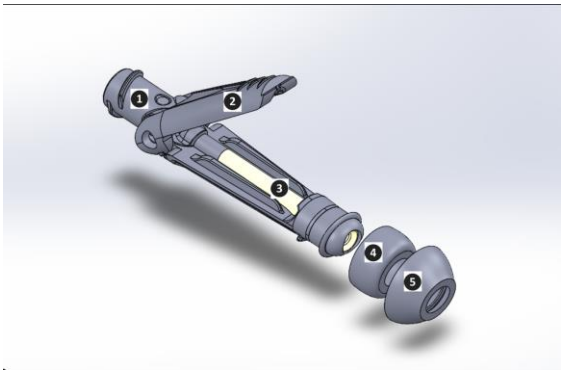

Figure 8. SolidWorks Assembly of Catheter Connector Prototype Version 6

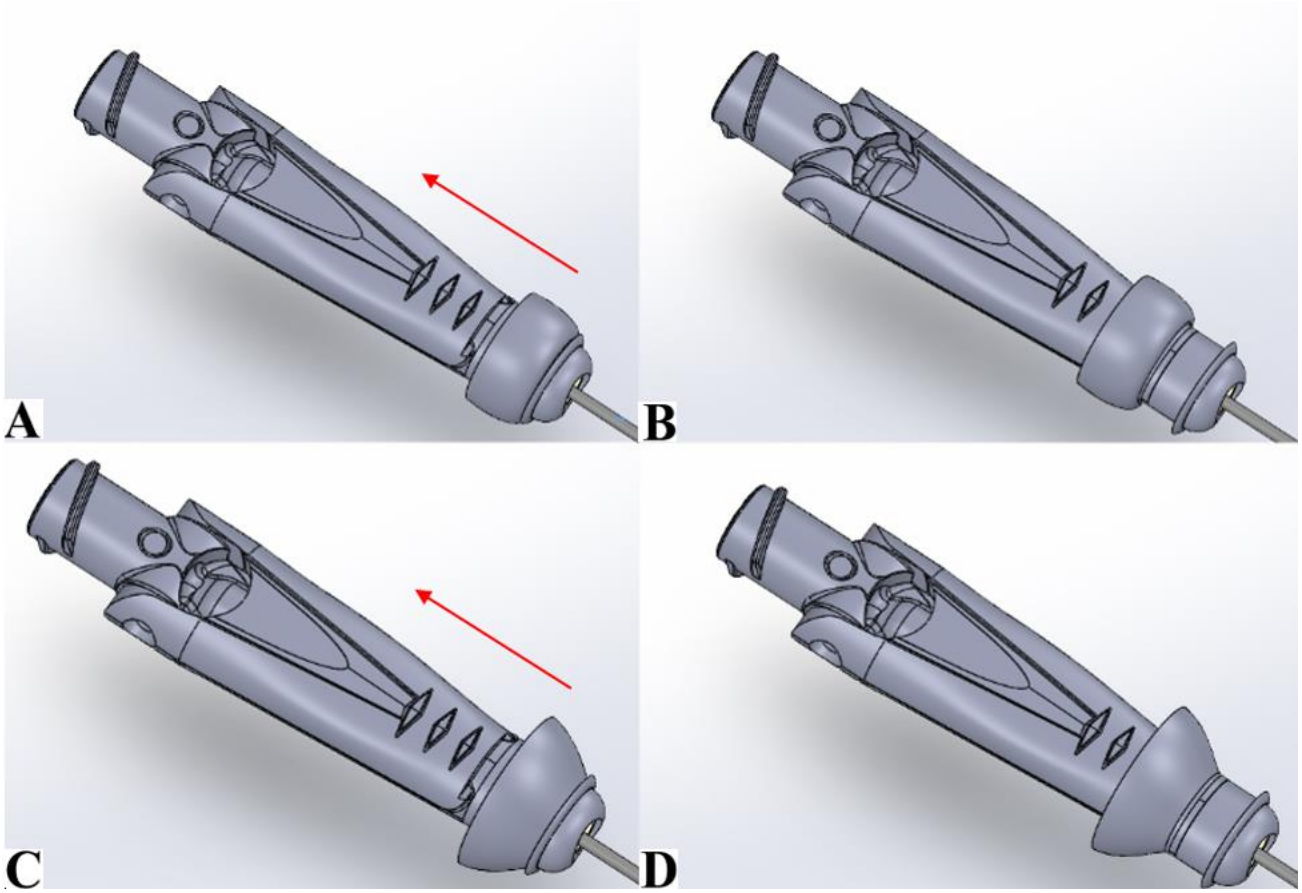

Figure 9. Both caps sit in the allotted space during transport to the client. The caps can be moved over top of the top and bottom jaw to ensure complete closure. In 9A and 9 C, the caps are sitting in transport position. In 9B and 9D, the caps are situated to apply reinforced grip on the top and bottom jaws. The model used in the diagram is version 6.

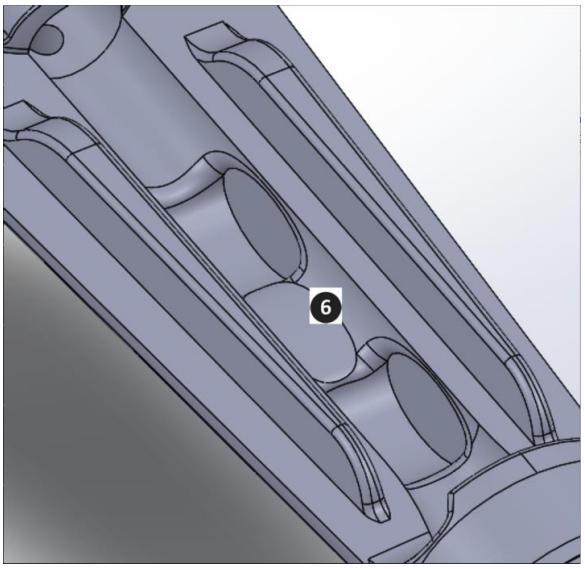

Figure 10. SolidWorks Part Bottom Jaw Version 6 Expanded View

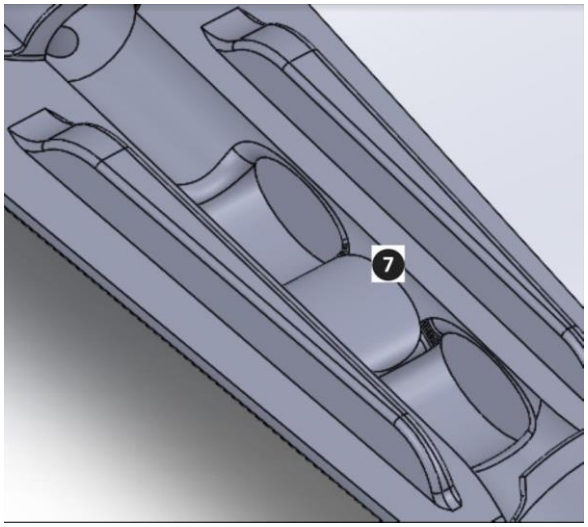

Figure 11. SolidWorks Part Bottom Jaw Version 7 Expanded View

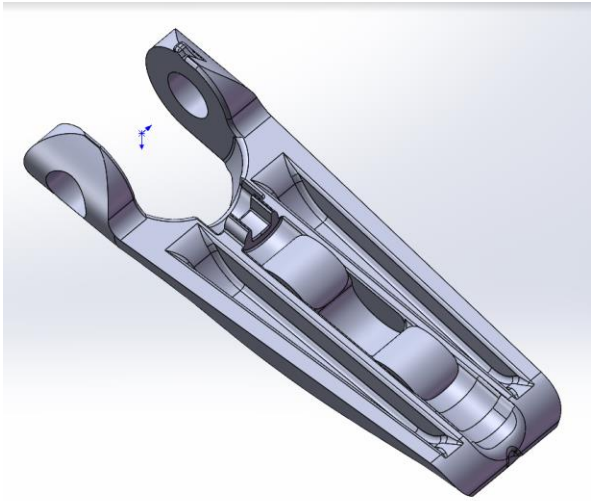

Figure 12. SolidWorks Part Top Jaw Expanded View

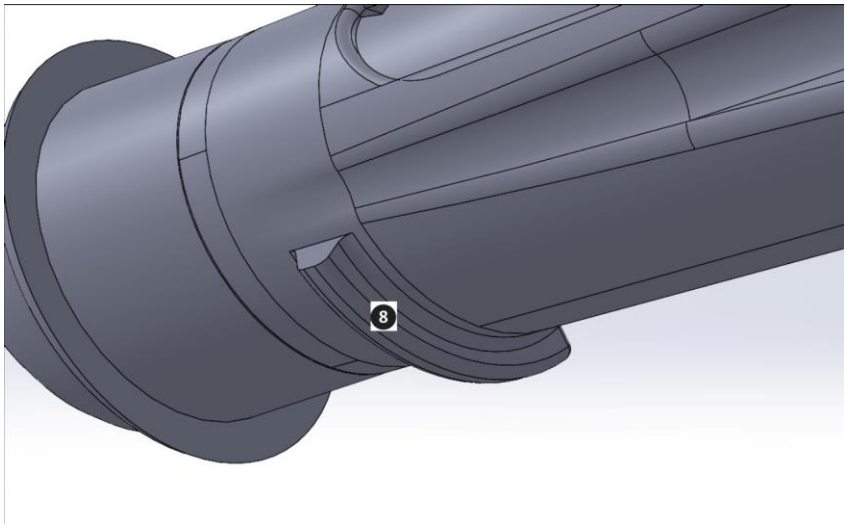

Figure 13. Bottom Jaw Expanded View of Bottom Ledge for Cap

Table 8. Manufacturing Process Plan

ASSEMBLY NAME	MATERIAL TYPE	RAW STOCK SIZE	OPERATIONS
Top jaw	Clear Resin	1L Cartridge	Form Labs 3D Printer
Bottom jaw	Durable Resin	1L Cartridge	Form Labs 3D Printer
Cap	50 A Resin	1L Cartridge	Form Labs 3D Printer
Inner Elastic Tubing	50 A Resin	1L Cartridge	Form Labs 3D Printer

6.2 Bill of Materials

The four components of the final prototype are the top jaw, bottom jaw, cap, and inner elastic tubing. The resin used in the Formlabs printers must be purchased from their website, so the team was limited in their options for materials. Therefore, availability and cost were driving factors in the overall decision to use resin, but that did not have an impact in the team's decision of the type of resin to use for each component. For each component of the prototype, the type of resin was carefully chosen so that their material properties most closely aligned with their function. Each type of resin that was considered was about the same price, and the team had much of their budget left.

The top jaw was printed with clear resin. The driving factors for selecting the top jaw material were rigidity and durability. The top jaw must be rigid so that the catheter connector can open, but it must be durable enough so it doesn't not break. The bottom jaw was printed with durable resin. The driving factors for selecting the bottom jaw material were durability and flexibility. The end of the bottom jaw must be bent downward in order to open the catheter connector, so it's material must be flexible, but also durable enough to not crack. The cap and the inner elastic tubing were both printed with 50 A resin. The driving factors for selecting the cap and elastic tubing material were elasticity and durability. The cap had to be elastic enough to stretch over top of the jaws and return to its original shape, but durable enough so that it does not break when stretched. The inner elastic tubing had to be elastic so that it can deform when the waveform clamps down to hold the catheter in place, but durable enough to not permanently deform. In addition to the materials used to manufacturing the prototype, three addition items were needed to test the prototypes. The driving factors for selecting the tubing, straight plugs, and luer connector were features, size, and cost. The material of each item is not necessarily relevant, and those items were specifically chosen due to their shape and size so that they would be compatible with the testing materials, but the team also searched for the cheapest option to stay within budget. **Table F-1** provides details of the purchased materials used for the manufacturing and testing of the final prototype. The bill of materials does not include shipping and taxes.

6.3 Analytical and Physical Modelling/Prototyping

Throughout the design of the product, the team never explicitly performed any analytical calculations because the geometry of the part was very complex. It was difficult to find back of the hand equations that would accurately depict the physics of the catheter of the connector. It made more sense to just directly test the part experimentally, as testing was readily available in a Penn State lab, and hence it was easier to test the part and to iterate based on those results.

Although the team never analytically modelled the part, fundamental engineering principles were kept in mind when designing the part. Firstly, for the initial iteration of the catheter cap, even with the dimensions of the cap having fit with the dimensions of the connector, the cap would not slide over the connector since the material would not elastically deform much under small forces. Hence, Hooke's Law was used:

$$\sigma = E\epsilon \quad (1)$$

Where σ = stress, E = Young's Modulus, and ϵ = strain. The team wanted the cap to elastically deform under small stresses so that it could go over the connector and squeeze it, and hence a resin was chosen with a lower Young's Modulus based on Hooke's law.

The team also used their understanding of solid mechanics when testing the grip strength of the catheter connector. It was difficult to test the true grip strength of our prototypes relative to the original design of the catheter connector due to the load tensile strength of the catheter. Hence, the team decided to use Nylon Monofilament line (a material used in fishing lines) to test the grip strength due to its' extremely high tensile strength.

In addition to solid mechanics, the team used fundamental ideas from fluid mechanics to try to understand how the design would impact the flow rate in the connector. In the final waveform design for the top jaw, the waveforms locally deform the catheter elastically at the points where the top jaw clamps onto the tube, and hence a bunch of small choke points form in the tube. Assuming incompressible and irrotational flow, Bernoulli's equation with head loss was used,

$$\frac{P_1}{\rho g} + \frac{V_1^2}{2g} + z_1 = \frac{P_2}{\rho g} + \frac{V_2^2}{2g} + z_2 + h_L \quad (2)$$

where P = pressure, V = velocity, z = height, and h_L = head loss. Due to the choke points, the team expected minor head loss due to the change in geometry and major head loss due to the promotion of mixing, which causes a thinner velocity profile that results in larger wall shear stresses due to a sharper velocity gradient at the wall. With increased friction, major head loss increases as per the following equation:

$$h_L = f\frac{L}{D}\frac{V_{avg}^2}{2g} \quad (3)$$

Where h_L = head loss, f = friction factor, V_{avg} = average velocity, L = length of the pipe, D = diameter of the pipe, and g = gravitational acceleration. With the head loss, the team expected a smaller volumetric flow rate since increasing head loss decreases V_2 as per equation 2 (and volumetric flow rate is the velocity multiplied by the cross-sectional area).

6.4 Risk Analysis

A Failure Mode and Effects Analysis (FMEA) is very important in the design process as it allows the team to analyze and gauge the potential risk and failures that may exist within the design. Risks for the following components of the design were analyzed: Catheter Fixation, Top Jaw Remains Closed, Top Jaw Clamps Down on Bottom Jaw, Cap Slides Over Top Jaw, and Catheter Clamp/Tubing. A full FMEA table can be found in **Table G-1** in the appendix for more information. The three most significant risks are top jaw clamps down on bottom jaw, catheter clamp/tubing, and cap slides over top jaw.

The top jaw clamping down on the bottom jaw is an essential function to the catheter clip. The occurrence of this happening is low; however, the severity is high at 8 and the detection is at a 4, giving the risk and RPN of 96. The failure for the jaws to be secured can be caused by the durable resin permanently warping. The warping of the resin may not be immediately apparent without close

inspection. The warped resin can lead to impaired clamping functionality as the warped jaw on the bottom may not properly align and lead to ineffective clamping. This ineffective clamping may result in a loose or insecure hold on the catheter. Therefore, the team advises to obtain high quality durable resin, and maintain an adequate environment to prevent the warping.

Catheter clamp/tubing had the next highest RPN at 54 because of its high severity and decreased chance of detection compared to the other risks. With the new waveform implementation, the tubing goes through more deformation and has the potential to have permanent tube deformation. This tube deformation can lead to restricted flow or even leakage. The deformation of the tubing can impact the delivery of medical treatments and patient safety. Additionally, detecting the deformation of the tubing may challenging to detect while the clip is closed. There are already preventative steps in place during the packaging process to prevent any deformation while in storage. Throughout the course of the catheter clips use, which is usually 3 days. The tubing should be able to handle the deformation.

The cap sliding over the top jaw had the third highest RPN at 42. This failure mode pertains to the cap that is deigned to slide over the top and prevent premature opening of the clip. Potential failure modes are the cap fails to securely engage with the top jaw and if the cap breaks. The cap was made from 50A resin which is durable but still has the potential to break if not handled properly. Since the sliding of the cap over the top jaw should be a fast process there is chance for error in the cap not being fully covering the top jaw. However, this is accounted for by adding an extruded lip on the bottom jaw to wear the cap can be securely engaged. If the cap fails to slide over the top jaw, then it can lead to premature opening, which is why the severity was put to a 7, however detecting if the cap is on correctly or not will be easy to identify and was put at a 2. To prevent any problems with the cap, the team advises to ensure the cap is fully over the top jaw and to handle the cap with care.

Two other risks were determined for the catheter clip, including the top jaw remaining closed and catheter fixation. The top jaw remaining closed had an RPN of 18 and catheter fixation had an RPN of 36. The top jaw remaining closed has such a low RPN because of the new implementation of the cap sliding over the top jaw. The addition of the cap minimizes the occurrence of the top jaw prematurely opening. Catheter fixation also had a lower RPN compared to the others due to the new implementation of the waveform design. This design increases the grip strength and therefore decrease the chance for grip slippage. Additionally, to prevent increasing the chances of grip slippage, the team advises against priming the catheter with saline or any other improper use when inserting the catheter into the clip.

6.5 Testing

After performing the risk analysis, the team worked to identify the different kinds of tests that will need to be performed on the prototype. These tests will be done to validate the prototype design, verify that the target specifications have been met, and ensure that risk is minimized.

The first need that must be tested was the durability of the device. This specification was quantified by being able to reopen the device 15 times before the hinge mechanism failed. The team plans to test this by opening and closing the device 15 times. This process will be performed on 5 different prototype models, 5 times.

Another need to be tested is the grip strength of the design. It is essential that the design has a sufficient amount of grip strength to ensure that the catheter does not slip out while in use. To test this specification, the team plans to use an Instron machine. Because the Instron uses clamps to hold samples being tested, the team had to make a base that fits into the clamps while securing the prototype. SolidWorks was used to design the base shown in **Figure 14**, and then clear resin was used in the 3D printing process. Once the base was 3D printed, it was hand threaded with a 10-35 bit, and a threaded

male Luer lock piece was glued in to ensure max strength. The clamps of the Instron grip onto the flat part at the bottom and the prototype screws into the male Luer lock at the top. Once the base is made, actual testing can begin. The team decided to run these tests using the catheters provided from B. Braun Medical Inc. as well as a Nylon Monofilament. A Nylon Monofilament that can withstand a 50-pound force was chosen to properly test the grip strength due to the fact that the catheter can only withstand around 1 pound of force. To set up these tests, the bottom end of the catheter or Nylon Monofilament will be inserted into the connector. The connector will be screwed into the top of the homemade base, which will be held in the bottom clamps of the Instron. The top end of the catheter or Nylon Monofilament will be inserted into the top clamps of the Instron. **Figure 15** shows the final Instron setup with the Nylon Monofilament. Finally, before running the grip strength tests, a team member will externally clamp the jaws of the connector together with a wrench to ensure the internal sine wave is being engaged. To run the actual tests, a team member will set up a 'Failure Test' which is already programmed into the Instron. This team member will press play and the catheter or Nylon Monofilament will be stretched up until it breaks or pulls out from the connector. This process should be repeated approximately 5 times using a catheter and the Nylon Monofilament on B. Braun's original model and the developed prototype. From this test, the team will acquire Grip Force vs. Time graphs which will be used to compare the maximum pound force reached from each product. Testing the grip strength will minimize the risk of the catheter slipping out of the connector.

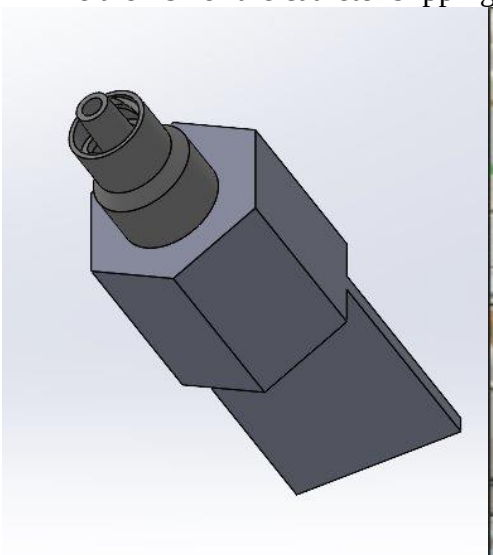

Figure 14. Instron Base Design

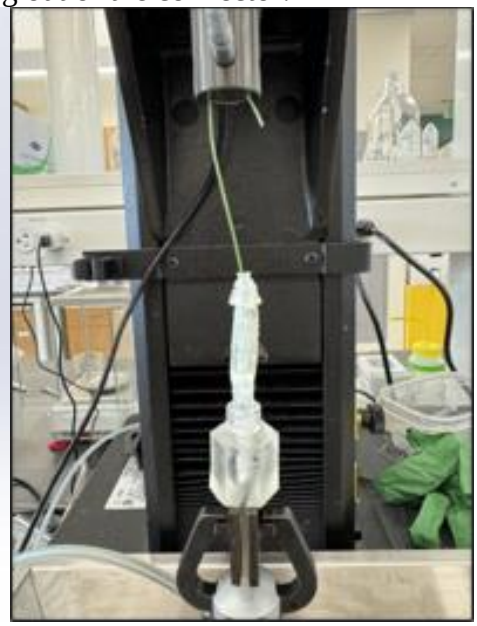

Figure 15. Instron Testing Setup

Another need to be tested is the minimum flow rate and pressure of the design. It is essential that these factors are tested to ensure that the design does not restrict the flow or cause any leakage. To test this specification, the team used a Mini CORI Flow machine. This setup will include a Luer lock with a flow tube at the prototype's entrance. The catheter will be inserted through the other side and water will be pumped from the machine through the connector and collected into a beaker. The final setup is shown in **Figure 16**. To test the flow rate, the pressure will be set as the independent variable at 1 psi. This will output a graph of Flow Rate vs. Time. This process should be repeated approximately 5 times on the developed prototype. The objective of these tests is to meet the requirements set by B. Braun Medical Inc. to ensure the new design is not restricting flow or causing any leakage.

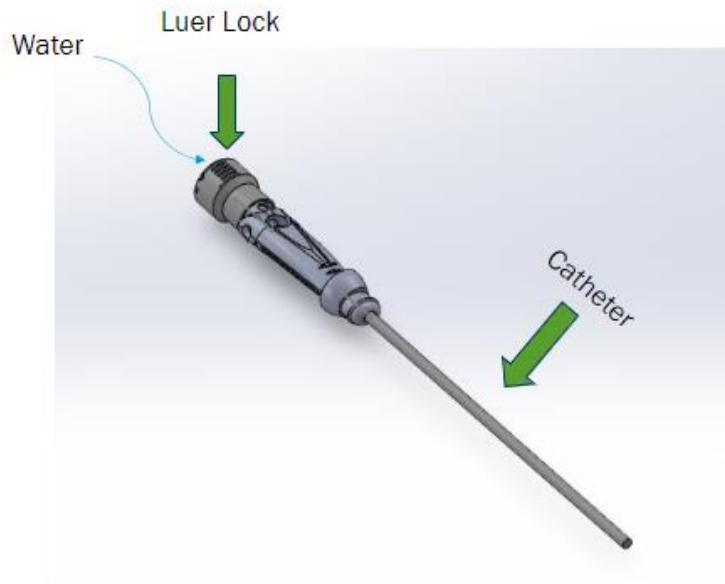

Figure 16. Mini CORI Flow Setup

The final need to be tested is the ease of use of the design. Ease of use was broken down into two specifications: time of application, and application with one hand. The team plans to test this by timing the application of the device by each team member and averaging the numbers, as well as documenting how many hands were used to complete the application.

6.6 Budget

Table 9. Budget

Category	Cost
Manufacturing Materials (resin & tanks)	$547.00
Testing Materials (tubing, plugs, connectors)	$73.96
Shipping & Taxes	$62.70
Total	$683.66

Table 9 shows the team's budget for the semester. While purchasing these materials, the team did not have any fixed costs, only variable costs. The team only used 55% of the total allotted budget, with 80% of the money spent on resin, and the rest spent on testing equipment and shipping costs. Due to the choice to solely manufacture the prototype with the Formlabs Form 3 resin printer, the only manufacturing material purchased was resin. There was no cost to use the printer, but the team had to purchase their own resin and tanks. To not damage the printer, the resin had to be ordered from the Formlabs website, and the smallest quantity available was one Liter. The team did not use up each kind of resin, but there was no other size option to be more cost effective. The team anticipated the cost of the resin to take up the largest amount of their budget.

Most of the testing materials used were free of charge because the team utilized a Penn State lab. A few addition materials, such as tubing and Luer locks, were required to complete the tests. When ordering these items, the team first checked PSU supplier websites because they often offer the lowest price. Some of the testing materials were not available from a PSU supplier, so the team had to look

elsewhere. The team located the website that sold the tubing for the cheapest price per foot. However, on that website, the tubing had to be ordered in a quantity larger than the team planned to use. To improve cost-effectiveness, the team could have searched for tubing that would have been cheaper overall, rather than just considering the cost per foot of tubing. Because the team was able to utilize free Penn State resources and the project required little variety of materials, they were able to stay under budget. The team made good decisions that led to them designing a cost-effective project.

The materials used and manufacturing process that that the team used to design their final prototype differs from the ones that B. Braun use to mass produce the catheter connectors. Therefore, the team cannot provide recommendations to improve the cost-effectiveness of the final commercial product. However, the team does expect that the cost to manufacture the new design is similar to the current cost per catheter connector.

7.0 Special Topics

7.1 Ethical Considerations

The primary stakeholder of this project is B. Braun Medical Inc., specifically the team's sponsor Joel Bartholomew. The users of this product are hospitals who administer epidurals. B. Braun Medical Inc. will be the distributor of this product, and therefore they must uphold ethical responsibilities during product development and manufacturing. First, B. Braun must perform extensive testing to ensure that the device they are selling is safe and reliable for the hospitals that are using it. As the sponsor stated, the current device is having malfunctions while in use, such as the clamp opening prematurely or the catheter slipping out. As a result, the team designed a device that ensures the clamp stays closed with an added cap and increased the grip strength by adding a sine wave. While these features have been added, they still need extensive testing and refinement before they can be implemented into the new design. The concept generation stage was largely influenced by the need to fix these malfunctions, and this is shown through the two major improvements implemented. The team did not find any cultural influences that may impact the ethical production, use, or sale of this device.

The team had no issue upholding the BMES Code of Ethics when developing this device. Following the BMES Code of Ethics is crucial for ensuring ethical conduct within the medical field, where this product will be used. The team upheld integrity and accountability to respect human welfare and did not let any internal/external pressures get in the way when completing this project. B. Braun is responsible for providing safe and reliable medical products; therefore, the team must uphold this standard and provide a device that is well-made and tested thoroughly.

7.2 Environmental Statement

The materials, manufacturing process, and packaging used by the team for the final protype, differs greatly from the process used by B. Braun when they mass produce the catheter connectors. The team's prototype was printed with three different types of resin due to the project's constraints, but the B. Braun's current catheter model is made of two types of polymers. The environmental impact section focuses on the environmental impacts of the catheter connecter if B. Braun were to mass produce the team's new design because no mass production would be done using resin and 3D printers. Using information provided by the sponsor, the team can make some conclusions about the catheter connectors life cycle, including the materials that the final prototype will be made of and its manufacturing process.

Focusing on the mass production by B. Braun, the team deconstructed the catheter connector's life cycle into areas of possible environmental impact. The life cycle stages and their design for

environment guidelines can be found in **Table 10**. For each life cycle stage, the team identified strategies that can be used to follow the DFE guidelines.

After reviewing each of the life cycle stages, the materials stage was determined to have the greatest negative impact, with the production stage in a close second. Currently, the material that B. Braun uses to construct the plastic parts of the top and bottom jaw is polypropylene, and polyamide is used for the inner elastic tubing. The team assumes that the cap can also be made from polyamide because it has similar properties as the tubing. Polypropylene has the world's second largest plastic by production volume, and it's manufacturing process has impacts on fossil resource depletion and is estimated to contribute 1.3 billion tons of CO2 to the atmosphere (GreenMatch, 2024). The extraction of the oils used to produce polyamides requires drilling with high energy machinery and can cause pollution (Slater, 2008).

The production stage of the polypropylene life cycle is a very energy-intensive stage when considering injection moulding, which is the method that B. Braun uses to manufacture the jaws of the catheter connector (Mennheim et al., 2020). While polypropylene can be recycled, it loses its flexibility as it goes through the recycling process (Business Waste, 2023). Some kinds of polyamides are recyclable, but when materials are mixed, there is very little recycling done (Hirschberg et al., 2023). It is not recommended that B. Braun uses recycled polypropylene to make their product, but the top and bottom jaws of the catheter connecter could be recycled after use.

The distribution stage of the life cycle is impacted by the packaging and delivery process of the catheter connectors. The amount of packaging used to ship the products can be reduced if the catheter connectors are packaged compactly, with the cap already attached to the bottom jaw. It is recommended to use biodegradable and recyclable packaging because it will be discarded after use. No additional assembly of the product is required before use. The negative impact of the distributions stage of the life cycle is moderate because the catheter connectors are small, but they require individual packaging to guarantee sterility before use.

While using the device, no emissions are produced. However, the catheter connecter is a one-time use product, so the use stage of the life cycle has negative environmental impacts. By minimizing failure modes of the product, which was the team's goal, the impacts of use stage can be reduced because more than one catheter connecter will not be required for a patient.

The recovery stage of the catheter connector also has moderate negative environmental impacts. The team suggests that disassembly instruction be sent out so that the polypropylene and polyamide components can be separated and recycled properly. The catheter connector does not require tools to disassemble, making it more efficiently recycled.

Table 10. Environmental Impacts Throughout Life Cycle and Improvement Suggestions

Life Cycle Stage	Design for Environment Guidelines	
Materials	Ensure sustainability of resources	• Specify renewable and abundant resources • Specify nonblended materials
Production	Ensure minimal use of resources	• Structure the product to minimize waste in production • Employ as few manufacturing steps as possible
Distribution	Ensure minimal use of resources	• Distribute products in a compact state

		• Minimize the use of packaging
Use	Ensure appropriate durability of the product	• Minimize failure modes in the product • Make wear detectable • Extend product life
Recovery	Enable disassembly and separation of materials and components	• Make component interfaces simple and reversibly separable • Employ one disassembly direction • Facilitate material recycling

7.3 Regulatory Considerations

For the redesigned B. Braun Perifix® Catheter Connector to be marketed and sold in the United States, it must adhere to regulatory standards set by the Food and Drug Administration (FDA). As a medical device intended for use in medical procedures, specifically for administering epidurals, it is likely classified as a Class II device. This classification indicates a moderate level of regulatory control to ensure safety and efficacy, typically necessitating a 510(k) premarket notification.

In a 510(k) submission, the essential requirement is to demonstrate that the new medical device is substantially equivalent to a legally marketed predicate device. This involves showing that the new device is at least as safe and effective as an existing, similar device approved for market use. For the Perifix® Catheter Connector, the predicate device could either be a previous version of the connector or another similar, legally marketed device.

To establish substantial equivalence in the 510(k) process, various tests would be required. These include biocompatibility testing to ensure the materials are safe for contact with human tissues, mechanical testing to verify the connector's integrity and durability, and sterility and shelf-life tests to prove that the device can be effectively sterilized and will remain sterile until use. Performance tests would confirm that the device functions as intended, focusing on aspects such as leakage, ease of use, and stability of the connection during use. In scenarios where the device introduces new technology or novel applications, clinical trials may be necessary to demonstrate safety and efficacy in its intended use environment.

In addition to FDA regulations, if the device is to be marketed internationally, compliance with regulations in other jurisdictions such as the European Medicines Agency (EMA) for Europe under the Medical Device Regulation (MDR) would be necessary.

8.0 Final Discussion

8.1 Test Results and Discussion

The three main customer needs are durability, reopenable, and ease of use. The fulfilment of meeting customer needs was determined through testing. The fulfilment for durability of the catheter connector was based on increasing the grip strength to be greater than 1 lbf, as well as meeting the minimum flow and free flow requirements. It is important to note that in the purpose of time, the team focused on the G24 catheter size. The minimum flow rate that needed to be met was 0.15 mL/min and the free flow requirement was 1 psi of pressure has to be able to freely flow through the catheter. These metrics were tested by using the Instron 68sc-05 dynamic mechanical analyzer and the Bronkhorst Mini CORI Flow. The Instron test was set up to pull the catheter up from the catheter clip at a constant

rate, and the test set up can be shown in **Figure 15**. The Bronkhorst Mini CORI Flow test was set up to push 1 psi of pressure through the catheter clip with the catheter connected, and the Mini CORI Flow had the ability to provide the resulting flow rate and pressure. The test set up for the Mini CORI Flow is shown in **Figure 16**.

Analyzing the test results, **Figure 17** shows the test results when the grip strength test was performed for both the redesign and the original connector. During the tests, the catheter kept prematurely breaking before pulling out, and hence there was no significant difference in the grip force between the connector redesign and the original connector. Thus, the team decided to perform the grip strength test using nylon monofilament line due to the high tensile strength of the material. When the grip strength test was performed using nylon monofilament line, there was significant increases in the grip strength when comparing the redesigned connector to the original, as shown in **Figure 18**. For both the 1 mm major axis design and the original design, we performed 6 consecutive tests for each. When comparing the average of the tests to each other, the average redesign grip strength value was 3.52 lbf, and the average original grip strength value was 2.38 lbf, resulting in an average grip strength increase of 47.8%. Of the redesign tests, the maximum grip strength was 3.92 lbf and the minimum strength was 2.94 lbf. Of the tests performed on B. Braun's original design, the maximum grip strength was 2.53 lbf and the minimum grip strength was 2.31 lbf.

One thing to note about **Figure 18** is that the team included 1 trial for the 0.5 mm major ellipse design for comparison. As can be seen, the strength of that design was much lower than the strength values for the 1 mm design, and hence the team decided to move forward with the 1 mm design due to the superiority of the latter design.

Looking at the spread of the grip strength data, there is a large variance in the redesign grip strength data. The standard deviation for the redesign grip strength data was 0.368 lbf, and the standard deviation for the original connector grip strength data was 0.0852 lbf. When the standard deviation of the redesign values is added to the mean of the redesign values, and the standard deviation of the original designs' values is subtracted from its' respective mean, the percent difference between these two values is 69.3%. When the standard deviation of the redesign values is subtracted from its respective mean, and the standard deviation of the original designs' values is added to its' respective mean, the percent difference between the two values is 16.3%. Hence, the grip strength expected increase range based on 1 standard deviation is 16.3%-69.3%. The team attributes the large variance in the data to both the lack of tests and the fact that the same catheter was reused for all 6 trials for each design.

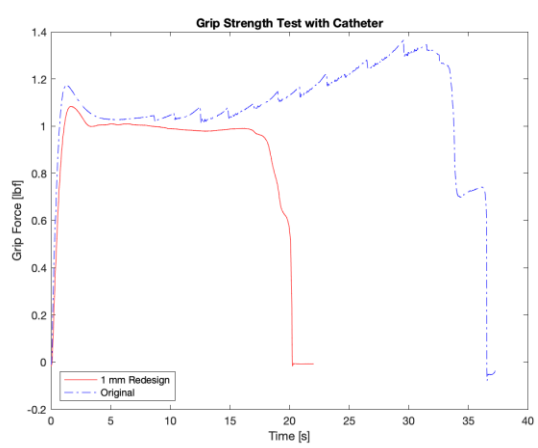

Figure 17. Grip Force Comparison of 1mm Redesign to Original Model with Catheter

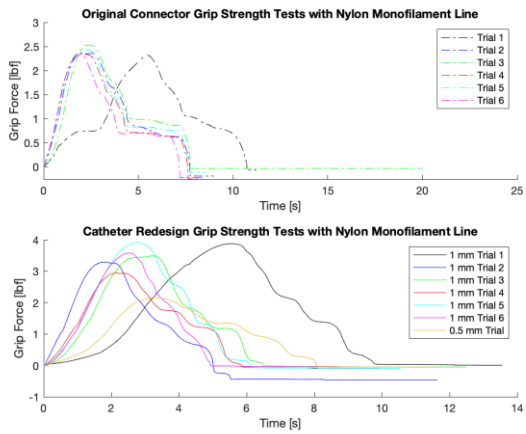

Figure 18. Collection of Grip Strength Tests

In terms of the flow rate tests, as shown in **Figure 19**, the experimental flow rate drastically exceeds the minimum flow rate at a pressure drop of 1 psi. The experimental flow rate remains relatively steady with the flow rate range being 0.812 – 0.979 ml/min, which exceeds the specified minimum flow rate of 0.15 ml/min.

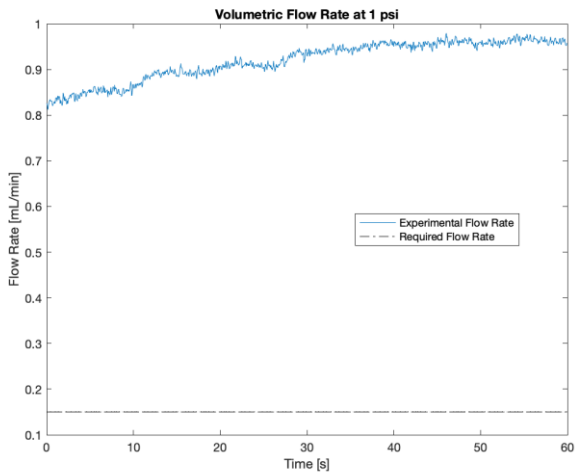

Figure 19. Volumetric Flow Rate of 1mm Redesign Model

Another key component of analyzing the durability of the catheter clip was preventing premature opening. The addition of the cap has fully fulfilled this requirement and was tested through trying to bend the bottom jaw to open the clip, and the clip would not open when the cap was in place.

The achievement of reopen-ability was dependent on if the clip can be opened again once closed. With the team's design, there is extra space for the cap to rest when not in use or when one wants to readjust the clip, therefore allowing for the clip to be reopened when desired. Unfortunately, the customer need for ease of use was not fulfilled. However, this was expected by the team, as the team had ease of use weighted at a lower of importance compared to reopen-ability and durability. Therefore, because the team was focusing on meeting that durability and reopenable requirements, ease of use was sacrificed.

8.2 Future Recommendations

The first component that needs improvement is the inner elastic tubing material. Due to time restrictions and limited material available to use in the Formlabs Form 3 Resin Printer, the team experienced issues when testing with the inner elastic tubing. The increased rigidity of the material compared to the material used in B. Braun's connector caused issues when trying to fully clamp the device to engage the sine waves. In turn, the team had to compensate and externally clamp the device during testing. This method can provide proof of concept, but to get more accurate test results it is recommended that the elastomer used by B. Braun is implemented into the team's current design. Another issue the team encountered with the inner elastic tubing was inserting it into the 3D printed prototype. The team used a UV curing gel to secure the tube into the device. This method was chosen to control the gluing time and increase the accuracy of placement. When this was carried out, there was occasional occlusion of the entrance and leakage that would occur. In the future, it is recommended that injection moulding is used to ensure that the tube is inserted correctly. This method is extremely cost and time demanding, therefore with proper funding, adequate time, and access to these methods, the inner elastic tubing could be implemented properly.

The SOLIDWORKS files of the top and bottom jaw could be improved if they were worked on in a part file. Due to being provided both SolidWorks files as assemblies, the team had to work around not being able to edit each component of the device. In the future, some of the new additions can be refined to a more ergonomic shape. Specifically, the wave form added was made up of ellipses, but in a part assembly these could be modified to be a smooth continuous sine wave.

Lastly, in terms of testing, the team suggests two things to B. Braun: that they use a stronger material than the catheter for grip strength tests, and that if they move forward with the top jaw design, they conduct more trials using different connectors for each trial to reduce the spread of the data. As discussed in section 8.1 of this report, the catheter kept prematurely breaking before the max grip strength was achieved for both our design and the original design during the grip strength tests, and when a stronger material was used, the team was able to see the exact grip strength at which the connector failed as opposed to when the catheter itself failed. Furthermore, in section 8.1 it was discussed how there was a large variance in the data for our design. Due to a lack of time, the team was only able to perform 6 trials, and hence a lot of the deviation is most likely since there were not enough trials to get a precise range for the performance of the connector. Hence, the team recommend that B. Braun perform as much trials as possible until a very small deviation is achieved. Furthermore, analyzing the overall spread of the data based on trial number (trials were conducted consecutively in order), even though the values for the redesign and B. Braun connectors are not the same, the plots follow a very similar distribution when solely looking at the trial number. The team believes that this observation is because the geometry of the connector may be potentially changing between trials due to plastic deformation. Unfortunately, the team was not able to perform the tests using different connectors for each trial due to a lack of time to print all of the connectors that would have been needed, so the team recommends that B. Braun uses a brand-new connector for each trial.

8.3 Group Reflection

Throughout the duration of the project, many tasks were formulated and completed. The management of tasks by the group was based on the Gantt chart, NDA/IPA, and canvas assignment completion due dates. The team demonstrated effectiveness in time management skills by meeting deadlines. The team worked to be flexible with B. Braun Medical Inc's busy schedule by maintaining constant open communication. The NDA/IP required that B. Braun have the ability to see presentations and aspects of the project that will be public view prior to submission to avoid proprietary information exposure to the public.

An improvement that could have been made in this project would be to have a more flexible Gantt chart since there were occasions where the team would be waiting for materials from B. Bruan or waiting for B. Braun Medical to find their SolidWorks files and be sent to the team. A more flexible Gantt chart would have alleviated pressure on the team due to B. Braun's busy schedule.

One troublesome aspect of this project was the logistics of printing the physical prototype. There were issues with the Form 3 printer during the prototype building that could have been addressed prior to the start of the capstone course. It was apparent that sensors and cleanliness of the printer degraded the ability of the printer to produce prototypes which required the printer to be restarted on multiple occasions. It was also apparent that other teams abused the printer and neglected to clean it properly which resulted in faulty print jobs for the team. Also, it is important to note that graduate students were also using the same printer to design their projects and thus made it difficult with planning times to print with other capstone projects and graduate students. When reflecting on this aspect, the lesson learned is to schedule routine maintenance for the Form 3 printer and enforce training among capstone teams and graduate students. An alternative would be to purchase another printer as to alleviate stress on the one printer.

Regardless of the logistical issues of the project, the team managed the project scope and sponsor expectations, meeting with the sponsor weekly to prevent scope creep and ensure alignment with project goals. A total of 8 prototypes were given to the sponsor, with 4 being version 6 models and 4 being version 7 models. There were no imperfections in each model designed and the Form 3 printer was able to handle the job of printing the project. Aspects of the prototype are in possible leu of the possibility of being patented to improve upon B. Bruan Medical's current catheter connector. From these experiences, the team learned to optimize task management and project execution that will be carried into future endeavours and projects.

Acknowledgements

Table 6. List of Primary and Secondary Contributors

Section	Primary Contributor	Secondary Contributor
Executive Summary	Ethan	Justin
Table of Contents	Angelina	Aras (Reviewed)
Introduction	Angelina	Aras (Reviewed)
Initial Problem Statement	Elise	Robert (Reviewed)
Objectives	Robert	Justin (Reviewed)
Project Management	Ethan	Robert (Reviewed)
Communication & Coordination	Justin	Robert (Reviewed)
External Search	Justin	Elise (Reviewed)
Literature Search	Ethan	Elise & Justin (Reviewed)
Patent Search	Elise	Angelina (Reviewed)
Stakeholder & Market Analysis	Elise	Angelina (Reviewed)
Primary Market	Elise	Angelina (Reviewed)
Existing Products	Elise	Angelina (Reviewed)
Primary Market Analysis	Elise	Angelina (Reviewed)
Needs Assessment	Aras	Angelina (Reviewed)
Gathering Customer Input	Aras	Ethan (Reviewed)

Organization & Weighting of Needs	Aras	Ethan (Reviewed)
Engineering Specifications	Robert	Aras (Reviewed)
Relating Specifications to Needs	Robert	Aras & Justin (Reviewed)
Establishing Target Specifications	Angelina	Aras (Reviewed)
REVISION of Proposal	Angelina/Elise/Robert/Aras/Justin	
FINISH Executive Summary	Elise	Aras (Reviewed)
Problem Clarification and Critical Subproblems	Aras	Angelina (Reviewed)
Concept Generation	Aras	Justin
Concept Selection	Ethan	Elise (Reviewed)
Manufacturing Specifications and Process Plan	Aras & Robert	Ethan (Reviewed)
Bill of Materials	Elise	Angelina (Reviewed)
Analytical and Physical Modeling	Ethan	Justin (Reviewed)
Risk Analysis	Robert	Aras (Reviewed)
Testing	Angelina	Justin (Reviewed)
Budget	Elise	Angelina (Reviewed)
Ethical Considerations	Angelina	Ethan (Reviewed)
Environmental Statement	Elise	Aras (Reviewed)
Regulatory Considerations	Aras	Elise (Reviewed)
Test Results and Discussion	Ethan & Robert	Elise (Reviewed)
Future Recommendations	Angelina	Robert (Reviewed)
Group Reflection	Justin	Robert (Reviewed)
Acknowledgements	Angelina	Team (Reviewed)
References	Elise	Justin & Aras (Reviewed)
Appendix	Elise	Justin & Ethan
Format, Grammar, Review	Angelina	Team (Reviewed)

References

1. B. Braun Medical Inc., "Perifix Catheter Connectors", *https://www.bbraun.com/*, viewed on January 2024.
2. Btaiche, Imad F., et al. "The effects of needleless connectors on catheter-related bloodstream infections." *American Journal of Infection Control*, vol. 39, no. 4, May 2011, pp. 277–283, https://doi.org/10.1016/j.ajic.2010.07.011.
3. Business Research Insights, "Epidural Catheter Market Report Overview", *https://www.businessresearchinsights.com/*, viewed on January 2024.
4. Clark, G., et al. (2014). *US Patent No. 8,876,798*. United States Patent and Trademark Office.
5. Cusumano, Lucas R., et al. "Design of a high-flow catheter connector to enhance fluid transfer." *Journal of Vascular and Interventional Radiology*, vol. 34, no. 5, May 2023, pp. 896–901, https://doi.org/10.1016/j.jvir.2023.01.002.

6. Doyle, A., et al. “A comparison of two epidural catheter connectors.” *International Journal of Obstetric Anesthesia*, vol. 20, no. 1, Jan. 2011, pp. 34–37, https://doi.org/10.1016/j.ijoa.2010.09.011.
7. Epimed, “Stingray Connector”, *https://epimed.com/*, viewed on January 2024.
8. Hirschberg, Valerian, and Denis Rodrigue. “Recycling of polyamides: Processes and conditions.” *Journal of Polymer Science*, vol. 61, no. 17, 19 May 2023, pp. 1937–1958, https://doi.org/10.1002/pol.20230154.
9. Ishida, Yoshiaki, et al. “Accidental epidural catheter removal rates and strength required for disconnection: A retrospective cohort and laboratory study.” *BMC Anesthesiology*, vol. 22, no. 1, 16 June 2022, https://doi.org/10.1186/s12871-022-01728-z.
10. “Is Polypropylene Eco-Friendly? Stats & Trends.” *GreenMatch.Co.Uk*, 26 Apr. 2024, www.greenmatch.co.uk/polypropylene-environmental-impact.
11. John Hopkins Medicine, “Epidurals for Labor – Fact Sheet”, *https://anesthesiology.hopkinsmedicine.org/*, viewed on January 2024.
12. Kellner, T., et al. (2019). *US Patent No. 10,471,247.* United States Patent and Trademark Office.
13. Mannheim, Viktoria, and Zoltan Simenfalvi. “Total life cycle of polypropylene products: Reducing environmental impacts in the manufacturing phase.” *Polymers*, vol. 12, no. 9, 24 Aug. 2020, p. 1901, https://doi.org/10.3390/polym12091901.
14. Medline, “Portex EpiFuse Epidural Catheter Connectors”, *https://punchout.medline.com/*, viewed on January 2024.
15. Mountjoy, Ryan, et al. “Why the disconnect? problems with a clamp style catheter connector.” *Regional Anesthesia & Pain Medicine*, vol. 44, no. 2, 30 Jan. 2019, pp. 281–282, https://doi.org/10.1136/rapm-2018-100112.
16. “Polypropylene Recycling.” *Business Waste*, 18 Oct. 2023, www.businesswaste.co.uk/your-waste/plastic-recycling/polypropylene-recycling/#:~:text=Polypropylene%20is%20recyclable.,goes%20through%20the%20recycling%20process.
17. Racz, N. S., et al. (2013). *US Patent No. 8,500,715.* United States Patent and Trademark Office.
18. Scholle, D., et al. “Influence of protective measures after epidural catheter disconnection on catheter lumen colonization: An in vitro study.” *Journal of Hospital Infection*, vol. 86, no. 2, Feb. 2014, pp. 133–137, https://doi.org/10.1016/j.jhin.2013.12.001.
19. Slater, Keith. “Environmental impact of polyester and Polyamide textiles.” *Polyesters and Polyamides*, 2008, pp. 171–199, https://doi.org/10.1533/9781845694609.1.171.
20. Teleflex, “Epidural Accessories”, *https://www.teleflexarcatalog.com/*, viewed on January 2024.
21. The World Counts, “Number of births per year”, *https://www.theworldcounts.com/*, viewed on February 2024.

Appendix: A

A full Gantt Chart is shown in **Figure A-1**. This chart outlines all the tasks that need to be completed throughout the semester, including deliverables due for the class and for the sponsor. The chart is designed so that each main topic has smaller, more specific deliverables assigned.

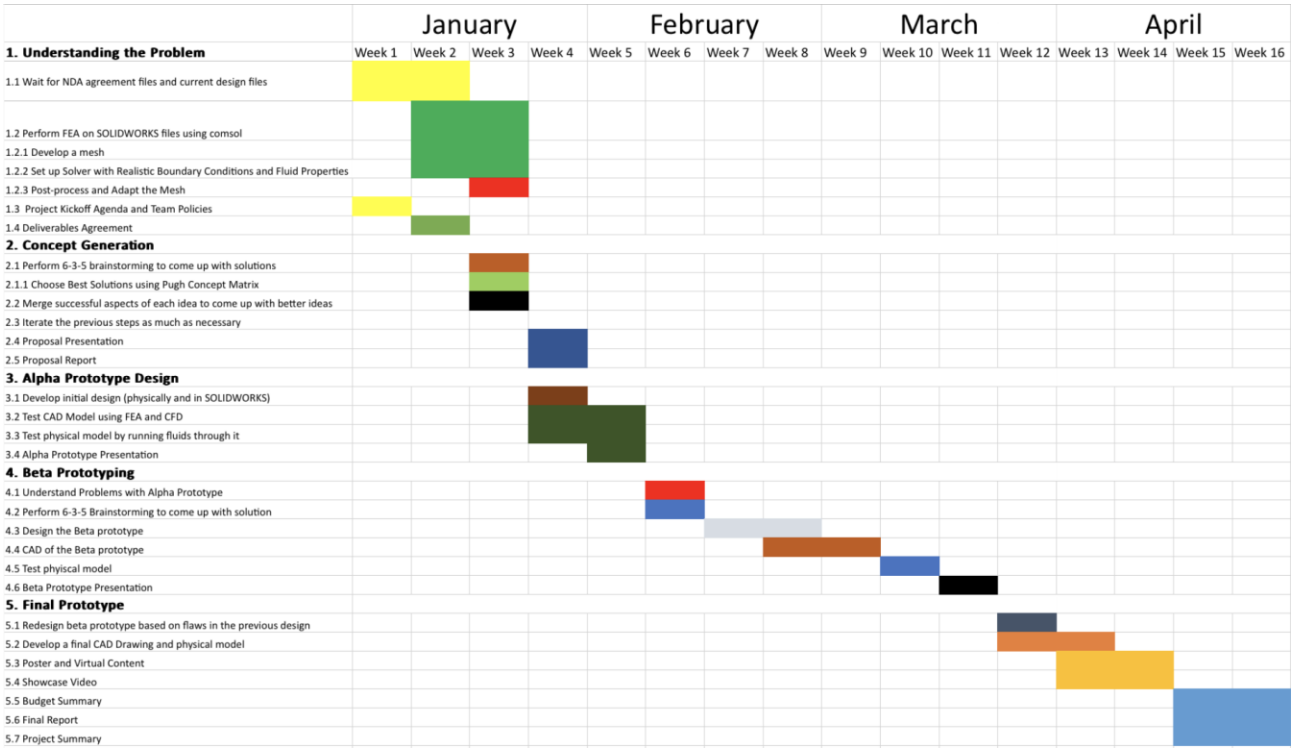

Figure A-1. Detailed Table of Proposed Team Management Plan

Appendix B: Patent Search Classifications

A patent search was conducted in order to find existing products that have a function similar to the one desired for this project. **Table B-1** outlines the search terms used and the CPC classifications that they were searched within. Search criteria after #4 was not included due to the large number of options. The sponsor also provided the team with a specific patent number for their current catheter connector design.

Table B-1. Search Classifications

Criteria #1	Criteria #2	Criteria #3	Criteria #4
A: Human Necessities	A61: Medical or veterinary science; Hygiene	A61M: Devices for introducing media into, or onto, the body; Devices for transducing body media or for taking media from the body; Devices for producing or ending sleep or stupor	A61M 25/00: Catheters; Hollow probes
			A61M 39/00: Tubes, tube connectors, tube couplings, valves, access sires or the like, specifically adapted for medical use

Appendix C: Patent Search

Patent #1: Catheter Coupling

Patent No: US 10,471,247 B2

Classifications:

International: A61M 39/10, A61M 39/12

U.S.: A61M 39/1011, A61M 39/10, A61M 39/12

Field: A61M 25/0014, A61M 39/10, A61M 39/1011, A61M 39/12, A61M 5/1418, A61M 25/0097, A61M 25/02, A61M 2039/1061, A61M 2025/024

Figure C-1 below illustrates a catheter coupling that is comprised of tubing and two jaws, which are shown in an opened position. The catheter coupling provides a connection between a tube and a catheter when the jaws are closed together. A catheter is inserted through the inner tubing when the jaws are open, and the jaws are then closed so the snap-in locking members become engaged. This causes deformation of the inner tubing that will secure the catheter in place (Kellner et al., 2019).

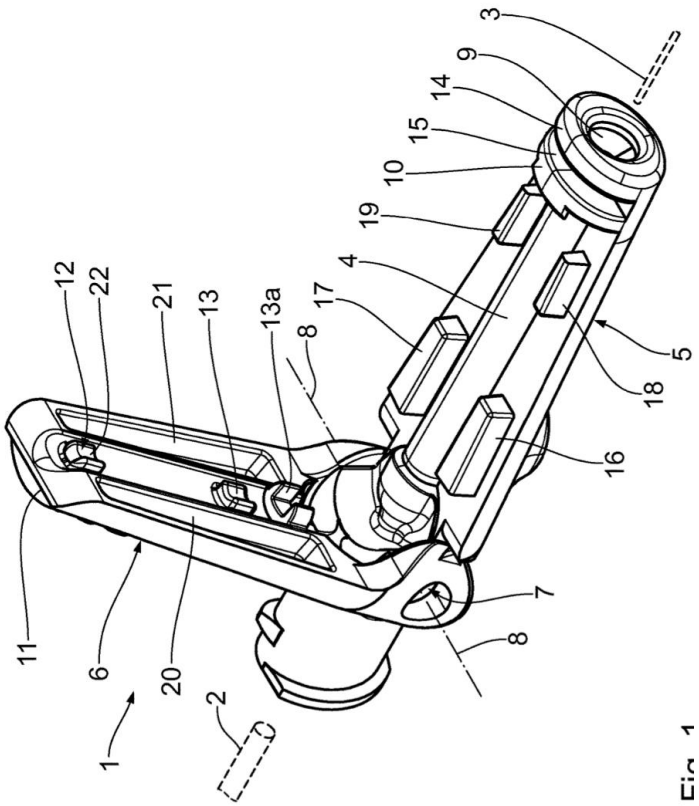

Figure C-1. Schematic of Catheter Coupling; U.S. Patent No. 10,471,247 B2

Patent #2: Catheter Connection Hub

Patent No: US 8,500,715 B2

Classifications:

International: A61M 25/16, A61M 25/18, A61M 5/178

U.S.: USPC 604/533, USPC 604/535, USPC 604/167.02

Field: USPC 604/19, USPC 604/48, USPC 604/93.01, USPC 604/164.01, USPC 604/167.01-167.06, USPC 604/533-539

Figure C-2 displays a catheter connection hub comprised of a catheter receiving element and a catheter coupling element. The two elements can engage in coaxial rotation, and a catheter can be inserted when the elements are twisted apart. Latches on both the receiving and coupling element limit the degree of rotation, and those latches engage to prevent premature dislodgement of the connection hub (Racz et al., 2013).

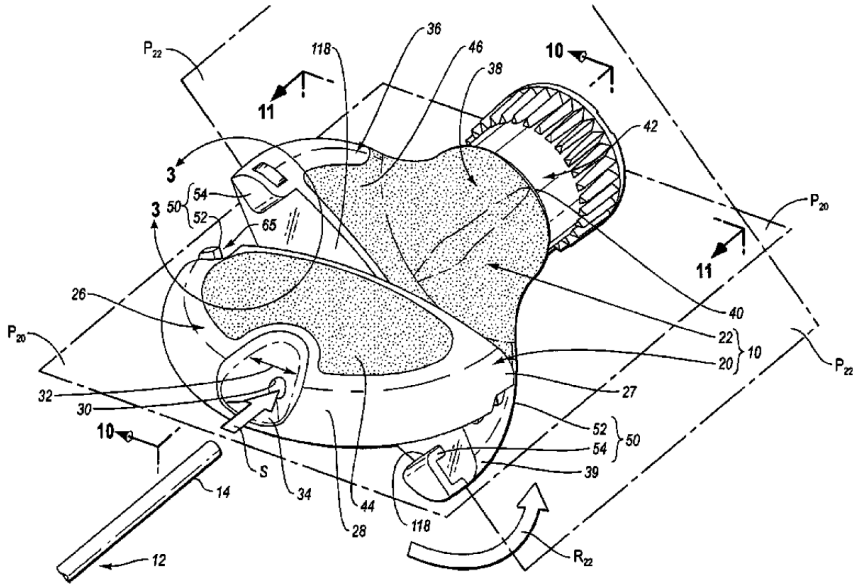

Figure C-2. Schematic of Catheter Connection Hub; U.S. Patent No. 8,500,715 B2

Patent #3: Catheter Adapter
Patent No: US 8,876,798 B2
Classifications:

International: A61M 25/16, A61M 25/18, A61M 39/00, A61M 39/10, A61M 5/00, A61M 39/12, A61M 25/00

U.S.: A61M 39/12, A61M 2039/1027, A61M 39/1011, A61M 25/0097, A61M 2039/1077

Field: USPC 128/DIG. 6, DIG.26; 604/174, 177, 533, 604/534, 535, 538, 257

Figure C-3 below illustrates a catheter adapter comprised of two clam shells that are connected by a hinge. When the shells are closed, the inner flexible tubing is deformed to secure the catheter in place while still allowing fluids to be pushed through when necessary. The latching mechanism is located to prevent accidental removal of the catheter. A pointed object must be inserted into the notch to decouple the shells and remove the catheter (Clark et al., 2014).

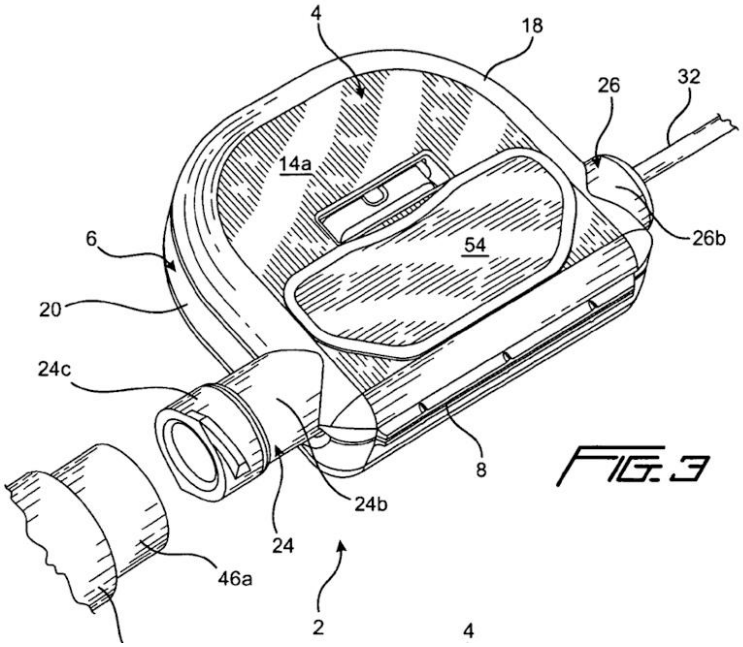

Figure C-3. Schematic of Catheter Adapter; U.S. Patent No. 8,876,798 B2

Appendix D: Concept Generation

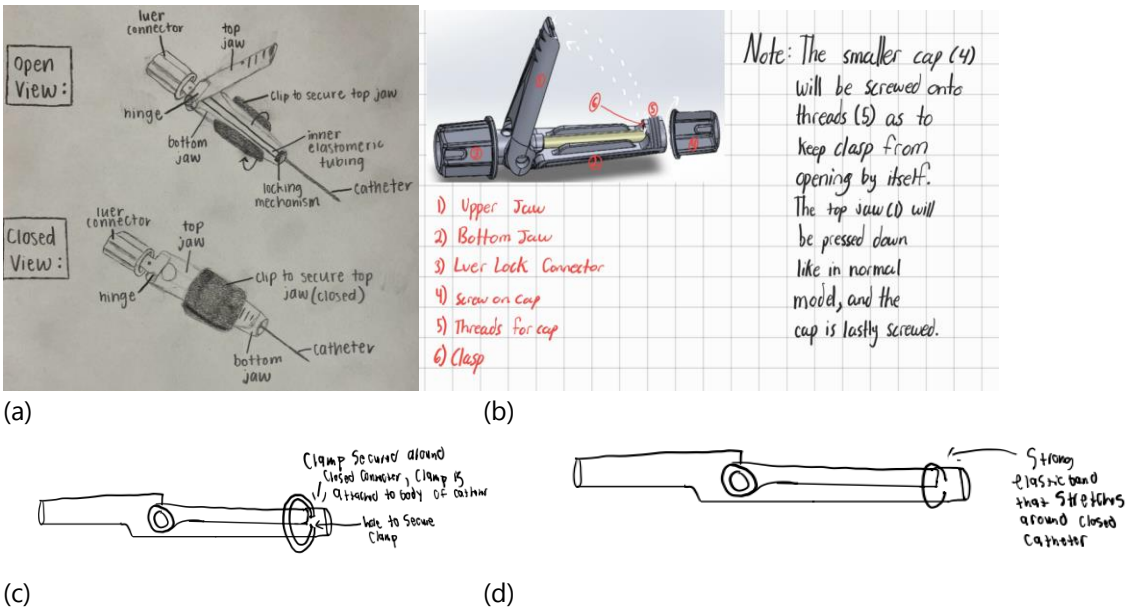

(a) (b)

(c) (d)

Figure D-1: Concept sketch addressing the issue of reopen ability (a) Secure Clasp, (b) Cap, (c) Barbell Clamp, (d) Elastic Band

Figure D-1 showcases some of the many concept sketches that were brainstormed early in the development stages. (a) showcases a clip was designed to lay securely over the catheter. It was meant to keep the top jaw and bottom jaw connected while in use and prevent the catheter from opening prematurely. (b) Showcases a small cap that is made of an elastic material to keep it from deforming,

but also can apply compression forces on the catheter while being stretched, increasing the overall required tensile strength required to opening the device.

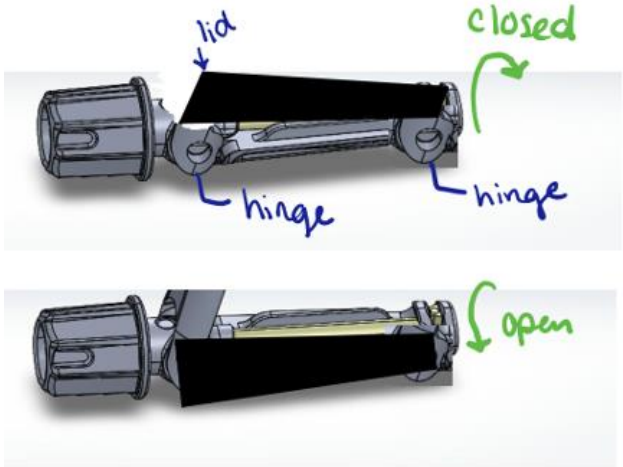

(a)

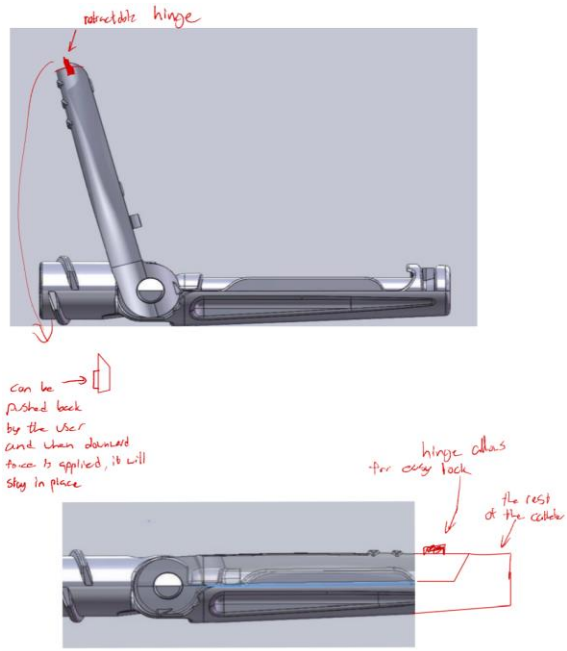

(b)

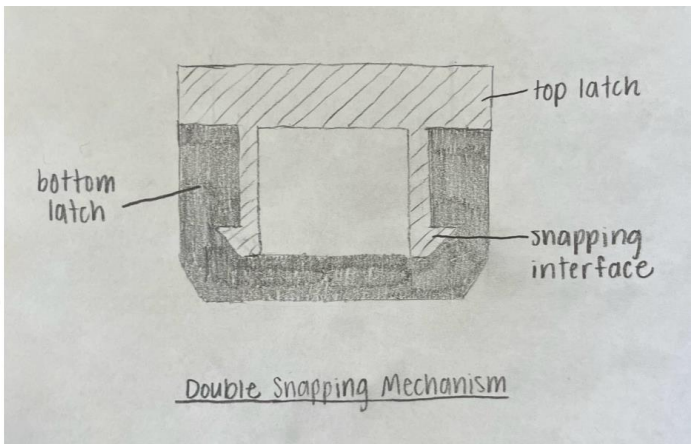

(c)

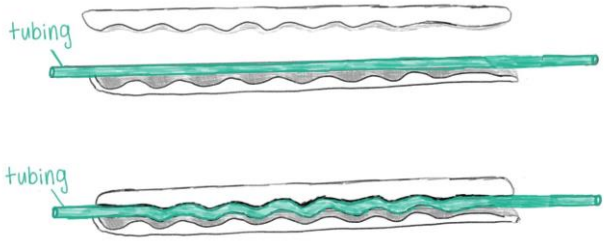

(d)

Figure D-2: Concepts generated for increasing durability. (a) Side hinge (b) Retractable hinges (c) Double snapping mechanism (d) Waveform design

Appendix E: Technical Drawings

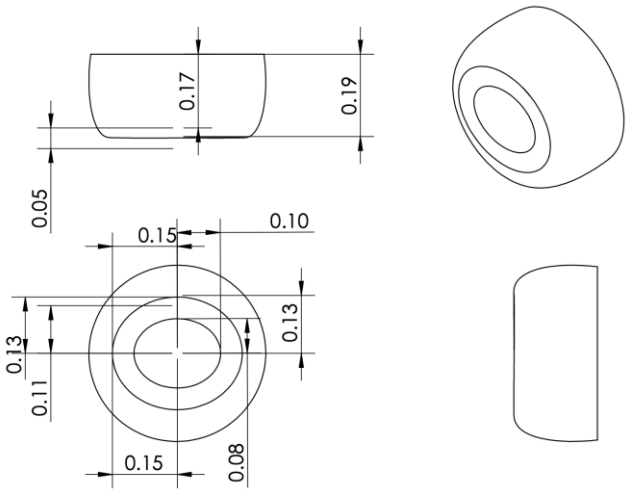

Figure E-1: Final Cap Design 1. Dimensions shown are in inches.

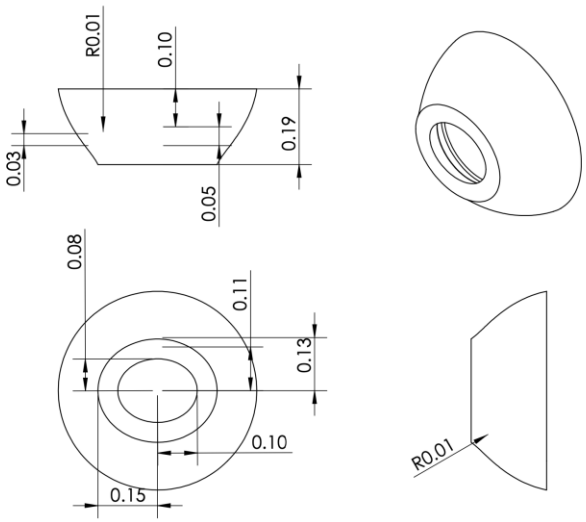

Figure E-2: Final Cap Design 2. Dimensions Shown are in Inches.

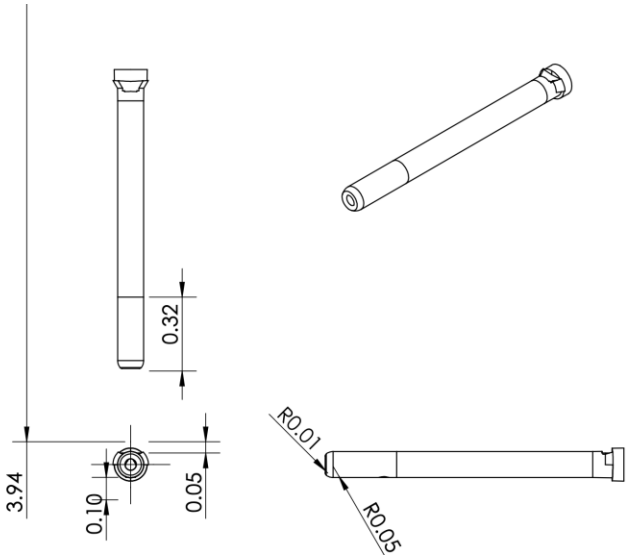

Figure E-3: Final Inner-Elastic Tubing

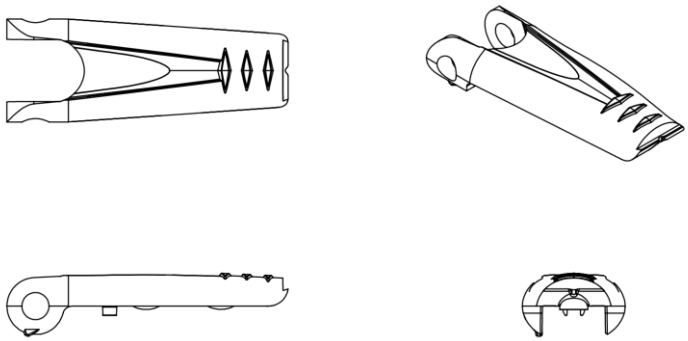

Figure E-4: Final Top Jaw Version Two

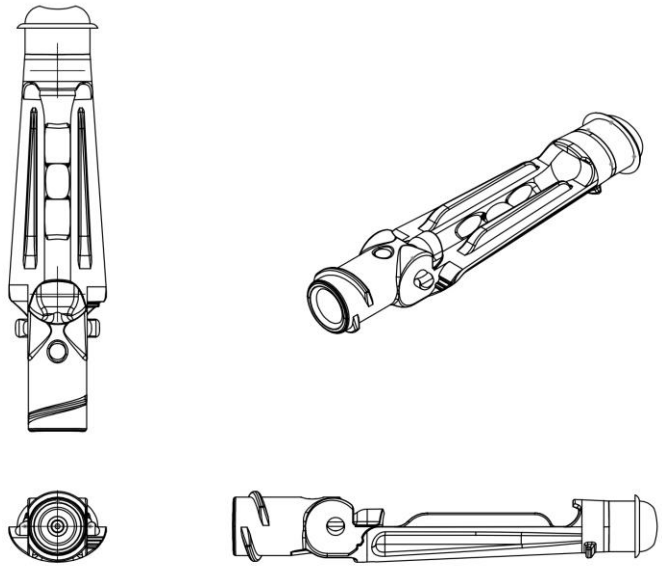

Figure E-5: Bottom Jaw Version 7 at 1.0mm

Appendix F: Billing of the Material

Table F-1. Bill of Materials

Category	Vendor	Item Number	Item Description	Quantity	Price Each	Cost
Resin	Formlabs	1	Clear Resin 1 L	1	$149	$149
		2	Durable Resin 1 L	1	$199	$199
		3	Elastic 50A Resin V2 1 L	1	$199	$199
Testing Materials	PreciGenome	4	PTFE Tubing, 1/16” OD x 1/32” ID, 50inch/pack	2	$19	$38
	McMaster-Carr	5	Straight Plugs, male Threaded Pipe, Taper Threads, Clear	1	$9.36	$9.36
	LabSmith	6	Mini Luer tube Tuck Connector	1	$26.60	$26.60
Total						$620.96

Appendix G: FMEA

Table G-1. FMEA

Process step/ input	Potential Failure mode	Potential failure effects	SEV	Potential Cuases	OCC	Current Controls	DET	RPN	Action recommended
Catheter Fixation	Grip Slippage	Can't use catheter; Catheter contamination	9	Improper placement of catheter; excessive movement from patient	4	Waveform implementation to increase grip strength; visual detection	1	36	Do not prime the catheter with saline or any other improper use of implementation of the catheter into the clip
Top Jaw Remains Closed	Failure to maintain closed position, slippage of catheter	Can't use catheter; Catheter contamination	9	Improper use of cap, excessive movement from patient	2	Cap implementation; visual detection	1	18	Ensure cap is securely fit over top jaw
Top Jaw Clamps Down on Bottom Jaw	Durable Resin Permanently warping	Impaired Clamping Functionality, Increased Wear and Tear	8	Poor resin quality, eniviromental factors (temperature and humidity)	3	Material Review, preventitive maintenance	4	96	Obtain high quality resin, and maintain an adequate enivroment
Cap Slides Over Top Jaw	Cap fails to securely engage with top jaw, cap breaks	Top jaw prematurely opens	7	Improper use of cap	3	Extruded lip on bottom jaw to indicate when cap is secure, Cap is clear for visual confirmation	2	42	Ensure cap is securely fit over top jaw, handle cap with care
Catheter Clamp/Tubing	Tube Deformation	Restricted Flow, Leakage	9	Prolonged clamping	2	The cather clip is packaged with the top jaw open open to prevent any deformation while in storage	3	54	Ensure the top jaw was open when received from packaging

SEV = severity
OCC = occurrence
DET = detection
RPN = risk priority number